WINTRISS®

User Manual

Shadow® 8

Safety Light Curtain
1139300
Rev. K March 2015

Tech Support Hotline 800-586-8324 8-5 EST

WINTRISS®

Wintriss Controls Group, LLC
100 Discovery Way
Unit 110
Acton MA 01720 USA
Phone (800) 586-8324
Fax (978) 263-2048

PRINTED IN USA

www.wintriss.com

Requirements You Must Meet When Installing and Using Shadow Safety Light Curtains

⚠ DANGER

DO NOT USE SHADOW LIGHT CURTAINS ON FULL-REVOLUTION POWER PRESSES

- DO NOT use Shadow safety light curtains on full-revolution clutched machinery, which cannot be stopped in mid-stroke.
- Use Shadow safety light curtains only on machinery that can be stopped at any point in the stroke or cycle.

Failure to comply with these instructions will result in death or serious injury.

⚠ DANGER

AVOID IMPROPER INSTALLATION, USE OR MAINTENANCE

- Follow all procedures in this manual. Perform only the tests and repairs listed in this manual. Use only factory-supplied replacement parts.
- Wire, install and maintain Shadow safety light curtain in accordance with OSHA lockout/tagout regulation 1910.147.
- Ensure that Shadow safety light curtain is installed, tested and repaired by a qualified person. Only a qualified person should possess keys, special tools, or other means needed to gain access to the control and modify the configuration of the Shadow light curtain.
- Ensure that all metal stamping presses on which Shadows are used meet the requirements and inspection procedures of OSHA regulation 1910.217 and ANSI standard B11.1-2009, which govern the use of presence-sensing devices on metal stamping presses. Ensure that all other machinery, or other devices on which Shadows are used, meet the general machine guarding requirements in OSHA standard 1910.212 and any other regulations and standards that apply.
- Ensure that guarding is installed to prevent access to the machine over, under or around the light curtains.
- Test the operation of your Shadow safety light curtain, using the test procedure shown on the Shadow safety light curtain control enclosure and also included in this manual.
- Perform the checkout and test procedures after any maintenance is done on the Shadow safety light curtain.
- Ensure that supervisors, die-setters, maintenance persons, machine operators, foremen, or any others responsible for the proper operation of the machinery have read and understood all instructions for use of the Shadow light curtain.

Failure to comply with these instructions will result in death or serious injury.

⚠ DANGER

MAKE SURE THAT MACHINERY IS CONFIGURED AND WORKING PROPERLY

- Ensure that the machinery and devices on which Shadow safety light curtains are used meet the general machine guarding requirements of OSHA standard 1910.212 and any other regulations and standards that apply.
- Inspect all stopping mechanisms of the machinery regularly to be sure they work properly.
- DO NOT operate a machine equipped with Shadow safety light curtains if the machine or any of its stopping mechanisms is not in proper working order.

Failure to comply with these instructions will result in death or serious injury.

⚠ DANGER

PREVENT STOPPING MECHANISM FAILURE

- Install and maintain stopping mechanisms of machinery or other devices according to the applicable regulations or standards.
- Regularly inspect all stopping mechanisms of the machinery to ensure proper functioning.

Failure to comply with these instructions will result in death or serious injury.

⚠ DANGER

UNPROTECTED EQUIPMENT MAY CONTINUE TO OPERATE AFTER GUARDED PRESS STOPS

- Equipment that operates with the machinery connected to Shadow safety light curtain may continue to operate after the machinery has received a stop signal.
- Ensure that all operators and other affected personnel know which equipment is connected to Shadow safety light curtain and which is not.

Failure to comply with these instructions will result in death or serious injury.

⚠ WARNING

GUARD AGAINST ELECTRIC SHOCK HAZARD

Turn off and disconnect power from the Shadow safety light curtain and from the machinery it is connected to, including the machine control and motor, before making any wiring connections.

Failure to comply with these instructions could result in death or serious injury.

Thank you for purchasing a Wintriss Product. We appreciate your business and want to do whatever we can to ensure your satisfaction. Wintriss products are built to stay on the job day after day, and are backed by an ironclad guarantee, international standards approvals, and unbeatable support. Whenever you need assistance or service, we back all our products with excellent spare parts inventories, training programs, and prompt repair service. We would like to share with you a list of service options–probably the largest number of service options offered in the industry.

- **Technical Assistance**

  We offer a toll-free line for technical assistance. Call our Wintriss Technical Support Hotline at 1-800-586-TECH (8324) should you have any questions about your equipment. Our technical staff is ready to assist you Monday through Friday, 8 a.m. to 5 p.m. EST. In many cases our experienced technical staff can resolve your inquiry right over the phone.

- **Return Authorization**

  Please call our "800" number for a return authorization (RMA) number to return a product for repair. Returned goods must arrive freight prepaid. In order to process your return quickly, we ask that you provide us with the following pertinent information when you call: purchase order number, shipping address, contact name and telephone number, and product type. The assigned RMA number should appear on all packages returned to Wintriss Controls Group to ensure prompt service.

  At the time of requesting an RMA, you will be quoted a flat-rate repair price for the product you are returning. We ask that you either fax us a PO for that amount or enclose the PO with the returned item. This will enable us to ship the item back to you as soon as the repair has been completed. If the item cannot be repaired or there are additional charges, you will be contacted for approval.

  Please be sure to carefully pack all returned items and ship to our Acton, MA location.

- **Expedited Repair Program**

  Rush service providing 48 hour turnaround is available for most products upon request. An Expedite Fee will be applied to our standard repair rate.

- **Board Exchange Program**

  If your needs are urgent, you can take advantage of our Board Exchange (EX) program. Call our "800" number between 8 a.m. and 5 p.m. EST and we will send a replacement to you overnight. A fee does apply to this service. Contact Wintriss Technical Support at 800-586-8324 for details.

- **Service Center**

  Our Service Center for product service is located at our headquarters in Acton MA. If your equipment requires repair, please contact us at 800-586-8324 to obtain a return authorization number.

  Nationwide field service is also available. Contact the Wintriss Technical Support group at 800-586-8324.

- **Product Training**

  We also offer both product training and maintenance/troubleshooting courses at our Acton, MA and Chicago-area facilities. On-site training is available from the factory or through your local Wintriss representative.

- **Restocking Charge**

  Returned goods are subject to a 20% restocking charge if returned for credit. The minimum charge is $50, not to exceed $250 per item.

Whatever the product, we are committed to satisfying you with innovative engineering, quality construction, reliable performance, and ongoing, helpful support. Call us whenever you need assistance.

Table of Contents

Chapter 1. Introduction 1-1

UL, CSA, CE, OSHA, and ANSI Compliance 1-2
Shadow 8 Components 1-2
Shadow 8 Operation 1-6
Shadow 8 Object Sensitivity 1-7
Shadow 8 and Control Reliability 1-7
Shadow 8 LED Displays 1-9
Shadow 8 Operating States 1-10
Shadow 8 Operating Modes 1-10
Programmable Fixed Blanking 1-11
Floating Blanking 1-11
Other Shadow 8 Features and Options 1-12
Shadow 8 Maintenance 1-12
Specifications 1-13

Chapter 2. Installation and Checkout. 2-1

Calculating the Safety Distance 2-2
- OSHA and ANSI Requirements 2-4
- OSHA Safety Distance Formula 2-4
- ANSI Safety Distance Formula 2-6
- European Safety Distance Formulas 2-8
- Increasing Safety Distance for Perimeter Guarding 2-10
- Increasing Safety Distance To Compensate for Blanking Windows 2-10
- Providing Pass-through Protection within the Safety Distance 2-12
- Height Considerations 2-14
- Special Requirements for Presence Sensing Device Initiation (PSDI) for Machines Other Than Mechanical Power Presses 2-14

Designing and Installing Mounts for Optic Heads 2-15
- Universal Mounting Brackets 2-15
- Mounting Location Requirements 2-15
- Designing and Installing Mounting Brackets and Floor Stands 2-16
- Aligning Brackets 2-21

Maximum Openings for Side Guards 2-22
Using Mirrors with Shadow 8 2-22
Reflective Surface Interference 2-25
Preventing Cross Talk between Two Sets of Shadow 8 Heads 2-27
Loosely Mounting Shadow 8 Transmitter and Receiver 2-28
Mounting the Optional Control 2-29
Wiring Main Optic Heads to the Control 2-31

Connecting Extension Heads 2-35
Connecting Extension Heads Using Pigtails Only 2-36
Connecting Extension Heads Using Interconnect Cables. 2-36
Connecting AC Wiring to the Optional Control 2-37
Connecting Stop Circuits to the Control 2-39
Wiring Shadow 8 in a Single Normally Open (N/O) Emergency Stop Circuit . . . 2-40
Wiring Shadow 8 to EDM Monitor Inputs 2-41
Wiring Shadow 8 Optional Control Box to a PLC 2-42
Wiring Shadow 8 Optional Control to a Wintriss Clutch/Brake Control 2-43
Wiring Auxiliary Output(s) 2-44
Setting Option Switches. 2-45
Setting Operating Mode (Receiver Switch 1). 2-46
Enabling External Device Monitoring (EDM) (Receiver Switch 2) 2-47
Setting Scan Codes (Receiver Switch 3, Transmitter Switch 1). 2-47
Enabling Floating Blanking (Receiver Switch 4). 2-48
Enabling Programmable Fixed Blanking (Receiver Switch 5). 2-48
Setting Scanning Range (Receiver Switch 6). 2-48
Enabling Machine Test Signal (MTS) (Transmitter Switch 2). 2-48
Connecting AC Wiring to Power Source. 2-49
Aligning and Tightening Down Shadow 8 Heads 2-49
Diagnosing Problems Before Using Shadow 8 2-52
No Power to Unit 2-52
Interlock/Alarm LED Is Illuminated. 2-52
Machine Run/Stop LED Not Illuminated Green 2-53
Machine Run/Stop LED Is Green But Machine Won’t Start 2-53
Shadow 8 Control Box or WPC Power LED Dims and Blinks 2-54
Performing Checkout and Test Procedures 2-55
Checkout Procedure 2-55
Test Procedure. 2-56
Adding and Removing Extension Heads. 2-59
Adding Extension Heads 2-59
Removing Extension Heads 2-60

Chapter 3. Operation 3-1

Shadow 8 LED Displays 3-1
Shadow 8 Operating States 3-2
Setting Operating Mode. 3-3
Automatic Start. 3-3
Start/Restart Interlock. 3-3
Programming a Fixed Blanking Window 3-4
Setting a Floating Blanking Window. 3-7
Enabling Both Blanking Options. 3-9

Chapter 4. Troubleshooting 4-1

Troubleshooting with Fault Codes 4-1
Other Troubleshooting Steps 4-5
Machine Run/Stop LED Is Red and No Fault Code Displayed. 4-5
Machine Run/Stop LED Not Green. 4-5
Machine Run/Stop LED Green but Press Won't Start. 4-6
Every Other IBI Lit 4-6
Transmitter Status LED Is Flashing. 4-6
Machine Run/Stop and Blanking Active LEDs Flash Simultaneously 4-6
Shadow 8 Control Box or WPC Power LED Dims and Blinks. 4-6
Checking and Cleaning Lens Windows 4-7
Checking Alignment 4-7
Checking and Replacing the AC Power Fuse in Optional Shadow 8 Control Box 4-8
Checking and Replacing Control Relays in Optional Shadow 8 Control Box . . 4-9
Performing a Resistance Test. 4-10
Replacing the Relay Board 4-11
Checking for and Correcting Cross Talk. 4-11

Appendix A. Wiring Shadow 8 Heads Directly to WPC A-1

Appendix B. Checkout Procedure Log B-1

Appendix C. Test Procedure Log. C-1

Appendix D. Extracts from OSHA Regulations and ANSI Standards. D-1

Extracts from OSHA Regulation 1910.217. . . . . D-1
Extracts from ANSI Standards for Presence-sensing Devices D-5

Glossary G-1

Index I-1

Wintriss Manuals

Figures at End of Manual

Figure A. Installing Shadow 8 Cabling in Liquidtight Conduit
Figure 1. Shadow 8 Transmitter and Receiver Head Wiring Diagram
Figure 2. Shadow 8 Connection for Simple N/O ESTOP Circuit Wiring Diagram
Figure 3. Shadow 8 Connection with External N/O and N/C Relays Wiring Diagram
Figure 4. Shadow 8 Connection with External N/O Relays Wiring Diagram
Figure 5. WPC 2000 and Shadow 8 Control Box Wiring Diagram
Figure 6. WPC 1000 Old Style and Shadow 8 Wiring Diagram
Figure 7. WPC 1000 New Style and Shadow 8 Control Box Wiring Diagram
Figure 8. WPC II and Shadow 8 Wiring Diagram
Figure 9. WPC I and Shadow 8 Wiring Diagram
Figure 10. Shadow 8 Control Option Wiring Diagram
Figure 11. WPC 2000 and Shadow 8 Wiring Diagram
Figure 12. WPC 1000 New Style and Shadow 8 Wiring Diagram

List of Figures

Figure 1-1. Shadow 8 Main Transmitter and Receiver 1-3
Figure 1-2. Shadow 8 Main and Extension Heads 1-4
Figure 1-3. Shadow 8 Control 1-5
Figure 1-4. Shadow 8 Light Beams 1-6
Figure 2-1. Safety Distance: Distance between Pinch Point and Light Curtain 2-3
Figure 2-2. Plan View of Pass-through Protection 2-12
Figure 2-3. Supplemental Guarding 2-13
Figure 2-4. Shadow 8 Stand Dimensions (Shown with Mounting Brackets for Heads) 2-17
Figure 2-5. Light Curtain Mounting Bracket Types 2-18
Figure 2-6. Shadow 8 Optic Heads: Mounting Dimensions 2-19
Figure 2-7. Shadow 8 Universal Mounting Brackets: Dimensions and Rotation (Top View) 2-20
Figure 2-8. Shadow 8 Universal Mounting Brackets: T-Slot Configuration 2-20
Figure 2-9. Aligning Brackets Using Mounting Holes 2-21
Figure 2-10. Shadow 8 with Mirrors for Three-sided Guarding 2-23
Figure 2-11. Shadow 8 Mirror Dimensions 2-24
Figure 2-12. Correct Mounting Example with Proper Alignment 2-25
Figure 2-13. Unsafe Mounting, Example 1 2-25
Figure 2-14. Unsafe Mounting, Example 2 2-26
Figure 2-15. Minimum Distance: Worst Case Alignment Example 2-26
Figure 2-16. Minimum Distance from a Reflective Surface as a Function of Range 2-26
Figure 2-17. Reversing Transmitters (TX) and Receivers (RX) to Prevent Cross Talk 2-27
Figure 2-18. Mounting an Optic Head with Shock Mounts 2-28
Figure 2-19. Shadow 8 Control Box: Mounting Dimensions 2-30
Figure 2-20. Shadow 8 Main Board: Location of Important Components 2-32
Figure 2-21. Cable Being Threaded through Top of Gland Nut and Threaded Coupling 2-33
Figure 2-22. Shadow 8 AC Wiring Connections 2-38
Figure 2-23. Relays Wired to Emergency Stop Circuit, N/O Configuration 2-41
Figure 2-24. Shadow 8 Option Switches (Located in Main Receiver and Transmitter) 2-46
Figure 2-25. Transmitter and Receiver Properly Aligned 2-50
Figure 2-26. Test Object Pattern 2-57

Figure 3-1. Using Supplemental Guarding with Fixed Blanking Windows 3-5
Figure 3-2. Coil Stock Unwinding Using a One-beam Floating Window 3-8
Figure 4-1. Fault Code “34” Displayed on Individual Beam Indicators on Main Receiver 4-2
Figure A-1. WPC Label for Program Off/On and Program/Run/Start Key Switches A-1

List of Tables

Table 1-1. Shadow 8 Specifications 1-13
Table 2-1. Shadow 8 Stand Height and Weight 2-17
Table 2-2. Light Curtain Dimensions in Inches (Millimeters) (see Figure 2-6) 2-19
Table 2-3. OSHA Table 0-10 2-22
Table 2-4. Shadow 8 Mirror Dimensions (see Figure 2-11) 2-24
Table 2-5. Main Receiver Wiring Connections 2-34
Table 2-6. Main Transmitter Wiring Connections 2-34
Table 2-7. Operating Mode Settings: Receiver Switch 1 2-46
Table 2-8. External Device Monitor (EDM) Settings: Receiver Switch 2 2-47
Table 2-9. Scan Code Settings: Receiver Switch 3, Transmitter Switch 1 2-47
Table 2-10. Floating Blanking Settings: Receiver Switch 4 2-48
Table 2-11. Programmable Fixed Blanking Settings: Receiver Switch 5 2-48
Table 2-12. Scanning Range Settings: Receiver Switch 6 2-48
Table 2-13. Consecutive Beam Alignment Requirement 2-50
Table 3-1. Consecutive Beam Requirement for Programmable Blanking 3-6
Table 4-1. Shadow 8 Fault Codes 4-2
Table A-1. Shadow 8 Main Transmitter/Receiver Wiring Connections to WPC A-2

How To Use This Manual

This manual shows you how to install, operate, and troubleshoot Shadow 8 light curtains and includes pertinent information about OSHA and ANSI requirements.

Chapter 1 provides an overview of Shadow 8 operation and features, including product specifications.

Chapter 2 shows you how to install and wire Shadow 8, set Shadow 8 options, and perform checkout and test procedures. The chapter also provides instructions for calculating the safety distance for your light curtains.

Chapter 3 shows you how to operate Shadow 8 and explains Shadow 8's operating modes, LED displays, and programmable fixed blanking and floating blanking features.

Chapter 4 shows you how to troubleshoot Shadow 8. The chapter provides a table of actions you can take to respond to Shadow 8 fault codes and explains how to check light curtain alignment and check and replace safety relays.

Appendix A shows you how to wire Shadow 8 Main Receiver and Transmitter directly to a WPC 2000 or "new-style" WPC 1000 clutch/brake control.

Appendix B provides a Checkout Procedure Log form that can be used to document the results of the checkout procedure.

Appendix C provides a Test Procedure Log form that can be used to document the results of the test procedure.

Appendix D provides extracts from OSHA regulation 1910.217 and ANSI standards B11.1-2009 and B11.19-2003.

The Glossary provides definitions of terms used in the manual that may be unfamiliar to some users.

Wiring diagrams at the end of the manual provide detailed wiring schematics to help you install your Shadow 8.

Important Highlighted Information

Important danger, warning, caution and notice information is highlighted throughout the manual as follows:

⚠ DANGER

A DANGER symbol indicates an imminently hazardous situation, which, if not avoided, will result in death or serious injury.

⚠ WARNING

A WARNING symbol indicates a potentially hazardous situation, which, if not avoided, could result in death or serious injury.

CAUTION

A CAUTION symbol indicates a potentially hazardous situation, which, if not avoided, may result in property damage.

NOTICE

A NOTICE symbol indicates important information that you should remember, including tips to aid you in performance of your job.

WARRANTY

Wintriss Controls warrants that Wintriss electronic controls are free from defects in material and workmanship under normal use and service for a period of one year (two years for Shadow light curtains) from date of shipment. All software products (LETS/SFC and SBR), electro-mechanical assemblies, and sensors are warranted to be free from defects in material and workmanship under normal use and service for a period of 90 days from date of shipment. Wintriss's obligations under this warranty are limited to repairing or replacing, at its discretion and at its factory or facility, any products which shall, within the applicable period after shipment, be returned to Wintriss Controls freight prepaid and which are, after examination, disclosed to the satisfaction of Wintriss to be defective. This warranty shall not apply to any equipment which has been subjected to improper installation, misuse, misapplication, negligence, accident, or unauthorized modification. The provisions of this warranty do not extend the original warranty of any product which has either been repaired or replaced by Wintriss Controls. No other warranty is expressed or implied. Wintriss accepts no liability for damages, including any anticipated or lost profits, incidental damages, consequential damages, costs, time charges, or other losses incurred in connection with the purchase, installation, repair or operation of our products, or any part thereof.

Please note:

It is solely the user's responsibility to properly install and maintain Wintriss controls and equipment. Wintriss Controls manufactures its products to meet stringent specifications and cannot assume responsibility for consequences arising from their misuse.

Wintriss Controls Group, LLC
100 Discovery Way
Unit 110
Acton, MA 01720
Telephone: (800) 586-TECH (8324)
(978) 268-2700
Fax: (978) 263-2048
Internet: http://www.wintriss.com

SHADOW 8 SAFETY LIGHT CURTAIN
USER MANUAL
1139300
©2015 Wintriss Controls Group, LLC

Chapter 1. Introduction

Shadow 8 is a compact, state-of-the-art light curtain consisting of Main Transmitter and Receiver optic heads, which can be wired directly to a new Wintriss Clutch/Brake Control (WPC) or to an optional Shadow 8 control. Main heads are capable of supporting up to three additional pairs of Extension heads connected in series with two cables, as long as the total length of the heads does not exceed 202 in. For either transmitters or receivers, the total length of heads and interconnect cables cannot exceed 110 ft. Due to its expandability, Shadow 8 is capable of safeguarding multiple sides of a machine with a single control.

Shadow 8 light curtains are designed to protect personnel working around dangerous equipment. The system signals the machine to stop if a person's hand (or any other part of the body) comes too close to the hazardous area. However, the invisible light screen does not interfere with normal operation. Unlike mechanical guards that physically block access to the hazardous area, Shadow 8 safeguards personnel with this field of invisible infrared light.

⚠ DANGER

DO NOT USE SHADOW LIGHT CURTAINS ON FULL-REVOLUTION POWER PRESSES

- DO NOT use Shadow safety light curtains on full-revolution clutched machinery, which cannot be stopped in mid-stroke.
- Use Shadow safety light curtains only on machinery that can be stopped at any point in the stroke or cycle.

Failure to comply with these instructions will result in death or serious injury.

⚠ WARNING

OBSERVE SAFETY REGULATIONS AND STANDARDS WHEN INSTALLING EQUIPMENT

- Install and use Shadow safety light curtains according to applicable safety regulations and standards.
- Install Shadow safety light curtains on presses according to the requirements and inspection procedures of OSHA regulation 1910.217 and ANSI standard B11.1-2009.
- Install Shadow safety light curtains on other machinery according to OSHA regulation 1910.212 for general machine guarding and any other regulations that apply.

Failure to comply with these instructions could result in death or serious injury.

NOTICE

USE EXTRACTS FROM SAFETY STANDARDS FOR REFERENCE ONLY

For your convenience, Wintriss has provided extracts from OSHA regulation 1910.217 and from ANSI standards B11.1-2009 and B11.19-2003 in Appendix D. These extracts are provided for the user's convenience only, and may not reflect the current revisions of these documents. For the most up-to-date information, refer to the latest versions of the original OSHA and ANSI documents.

UL, CSA, CE, OSHA, and ANSI Compliance

Shadow 8 has undergone independent testing, certification, and/or approval by the following bodies:

UL (Underwriters Laboratories) to UL CCN's NIPF/ NIPF7 for Type 4, Light Curtain System (Applicable Requirements: ANSI/UL 61496-1, -2, UL 508, UL 1998, the Standard for Safety Related Software, CAN/CSA-C22.2 No. 14, CAN/CSA-C22.2 No. 0.8).

TÜV to the relevant Essential Health and Safety Requirements (EHSRs) of the European Machinery Directive (98/37/EC) and the relevant requirements of the Low Voltage Directive (73/23/EEC as amended by 93/68/EEC) and with the essential protection requirements of the Electromagnetic Compatibility (EMC) Directive (89/336/EEC, 92/31/EEC and 93/68/EEC) per EC Type-Examination Certification for Type 4 Safety Light Curtain (Applicable Requirements: IEC EN 61496-1, -2, EN 954-1, EN 60204-1, EN 50178, IEC 62061, SIL 3 per IEC 61508, EN ISO 13849-1, and 2002/95/EC – Restriction of the use of Certain Hazardous Substances - RoHS).

Shadow 8 also complies with OSHA 1910.217, ANSI B11.1, ANSI B11.19, CSA Z142, and CSA Z432.

These rules mandate that a single component failure cannot jeopardize operator safety. Critical components must be duplicated and continually cross-checked during operation to guarantee that a single component failure can never create an unsafe condition. Self-checking circuitry must be capable of detecting the presence of any faults and of signalling the press to stop.

Shadow 8 Components

Shadow 8 optic heads (see Figure 1-1, page 1-3) are constructed of rugged, heavy-gauge extruded aluminum (0.10 in., 2.6 mm wall thickness). These compact heads (1.50 x 1.97 in. cross-section) come in sizes ranging from 12.6 in. to 5 ft. in height and 9.4-in. extensions.

Optic heads have a keyed, threaded connector at one end and a 7-in. pigtail with connector at the other. If the head is a Main Receiver or Transmitter, the connector on the pigtail is used to connect the head to the cable wired to the control (see Figure 1-2, page 1-4). The other connector can be used to connect a second pair of light curtains, called Extensions, to the Main pair via the pigtail-and-connector on the Extension Receiver or Transmitter.

Up to three pairs of Extension Receivers/Transmitters can be connected in series to the Main pair, but the total length of the heads cannot exceed 202 in. The total length of heads and interconnect cabling cannot exceed 110 ft. for either transmitters or receivers. Additional cabling for interconnections between Extension heads is available in various lengths.

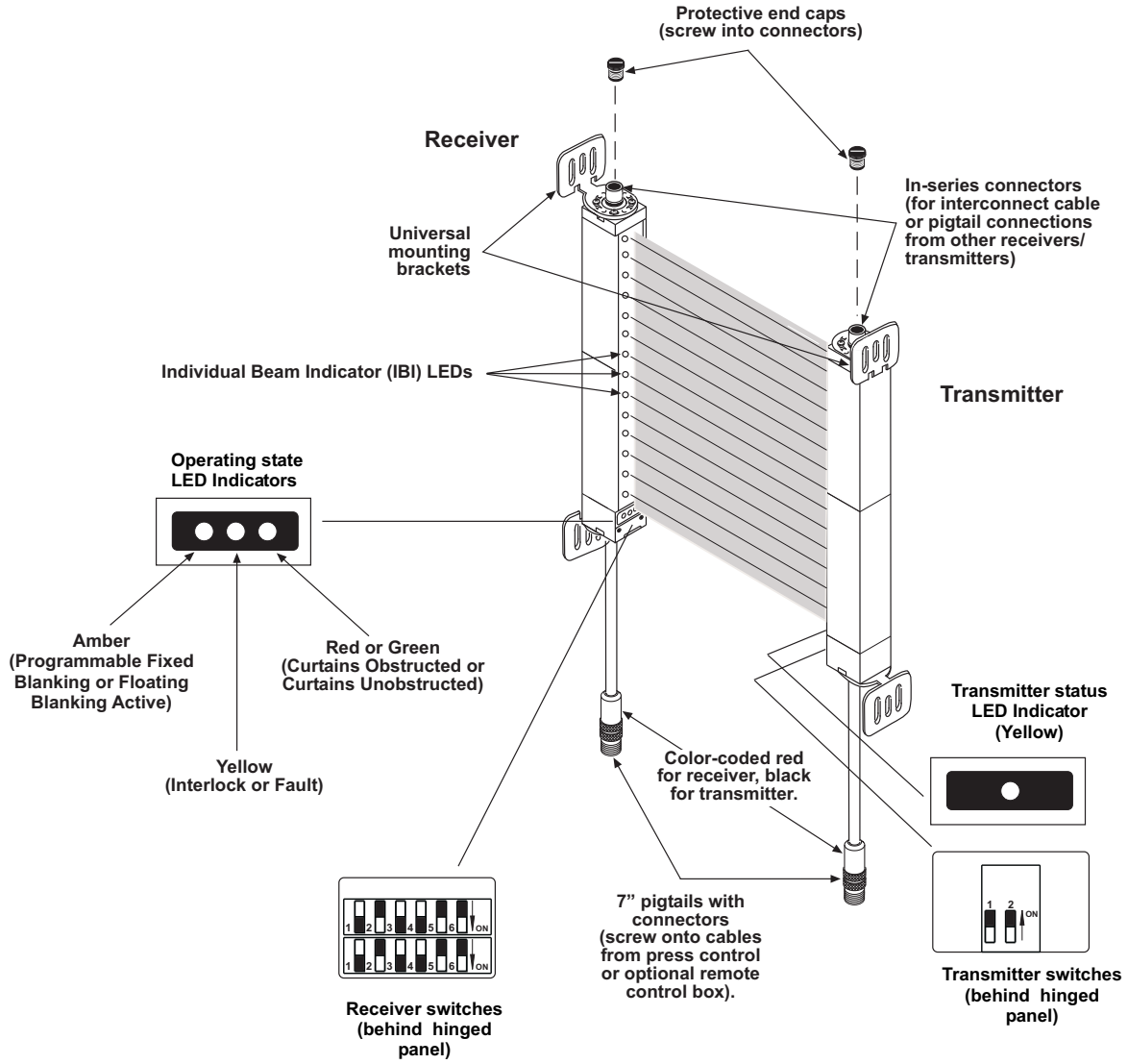

Figure 1-1. Shadow 8 Main Transmitter and Receiver

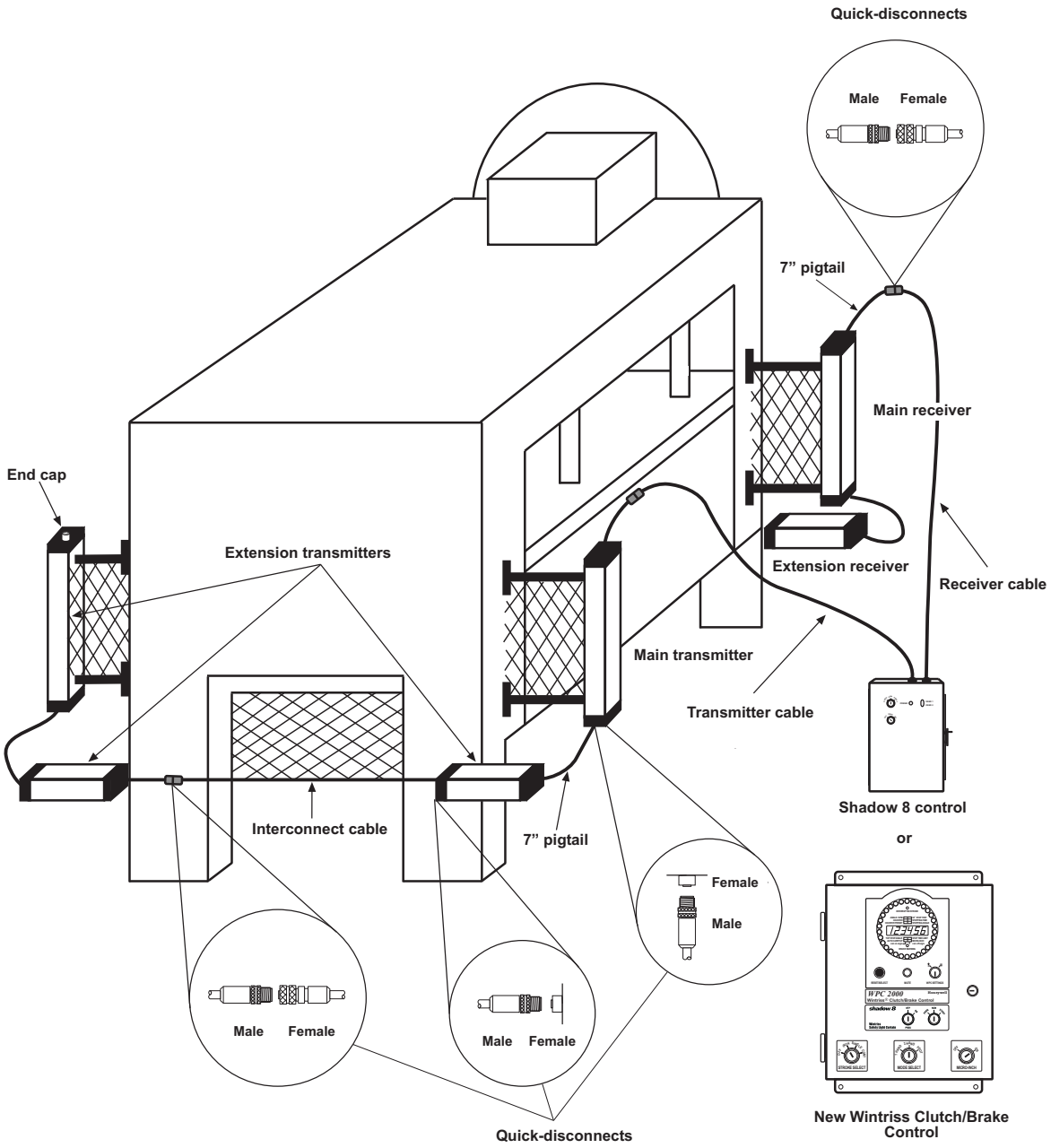

Figure 1-2. Shadow 8 Main and Extension Heads

An optional control enclosure (see Figure 1-3) is available for Main Receiver and Transmitter unless you are connecting Shadow 8 to a new Wintriss Clutch/Brake Control. The enclosure can accommodate any-sized receiver and transmitter. No special settings are required. The control contains a power supply and relay circuitry.

For added security, the control comes standard with two key switches. The Program/Run/Start key switch is used alone to reset the light curtain after machinery has been stopped due to a fault (see Figure 1-3). Simply turn the switch to the START position to clear the interlock or alarm condition. The Program/Run/Start key switch can also be used with the Program Off/On key switch to program a fixed blanking pattern. See *Programming a Fixed Blanking Window*, page 3-4 for details. In addition, the clasp which secures the door of the control can be padlocked to prevent unauthorized personnel from gaining entry. A screw-down latch for securing the door is also provided.

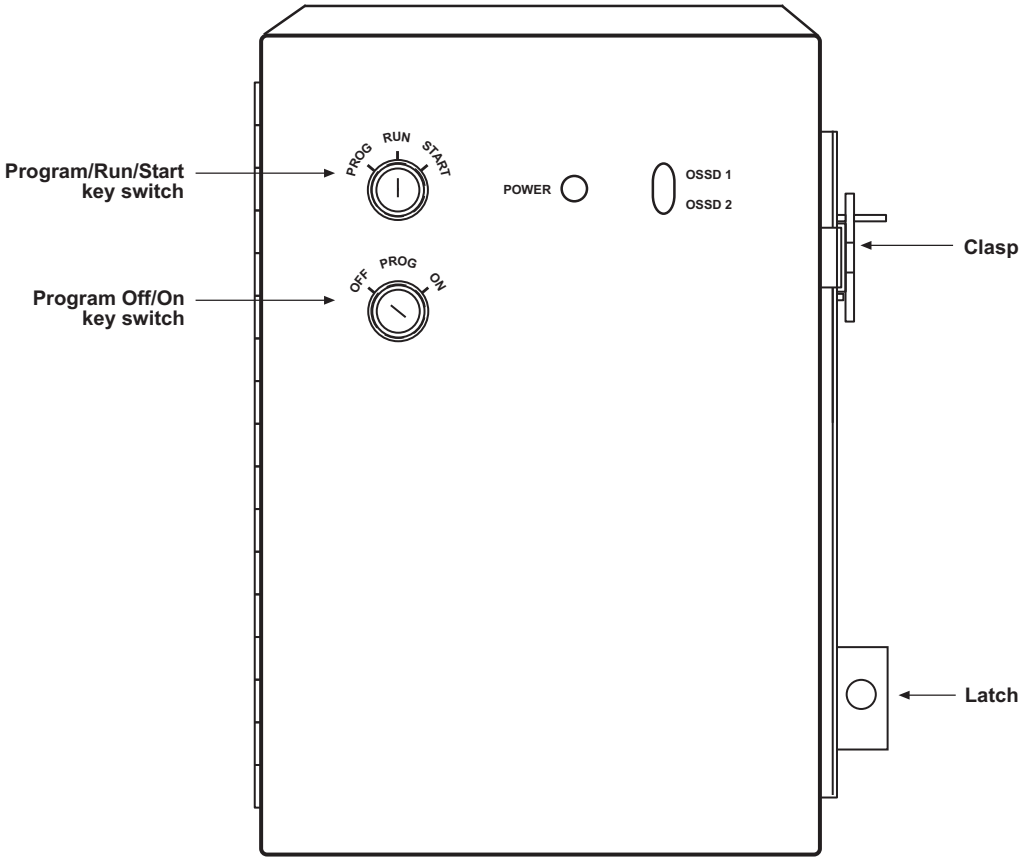

Figure 1-3. Shadow 8 Control

Cables for connecting the control to the Main Receiver and Transmitter are available with the light curtain. They are sized in various lengths and fitted with a keyed, threaded connector at one end that screws easily into the pigtail-and-connector on the optic heads. The other end of the cable is not terminated, allowing the cable to be wired to the appropriate terminal block in the optional control (see Figure 2-20, page 2-32) or in the WPC. Receiver cables, which are terminated by a connector with a red overmold, are eight-conductor, shielded. Transmitter cables are five-conductor, shielded and have black connector overmolds.

Shadow 8 Operation

⚠ WARNING

UNPROTECTED EQUIPMENT MAY CONTINUE TO OPERATE AFTER GUARDED PRESS STOPS

Ensure that all operators know which device(s) are protected by your Shadow safety light curtains and which are not. Though a protected press will stop when the Shadow light curtain is interrupted, associated feeds and conveyors not protected by Shadow will continue to operate after the press stops.

Failure to comply with these instructions could result in death or serious injury.

The Shadow 8 light curtain is an optoelectronic presence-sensing device. Shadow 8 uses light and electric current to detect any object penetrating its field, and when an object is detected, the light curtain reacts by signaling the press, or other equipment, to stop.

Shadow 8's transmitter and receiver are mounted on either side of the hazardous area. LEDs (light emitting diodes) in the transmitter emit harmless, invisible, infrared light pulses when electric current passes through them. These conical beams of light are aimed at phototransistors in the receiver (see Figure 1-4), which produce an electrical signal whenever a light pulse strikes them. An invisible light barrier is formed by these infrared light beams passing between the transmitter and receiver. If one of the phototransistors in the receiver does not "receive" its designated light pulse, as when the operator's hand or another obstruction penetrates the light field, Shadow 8 sends a stop command to the press.

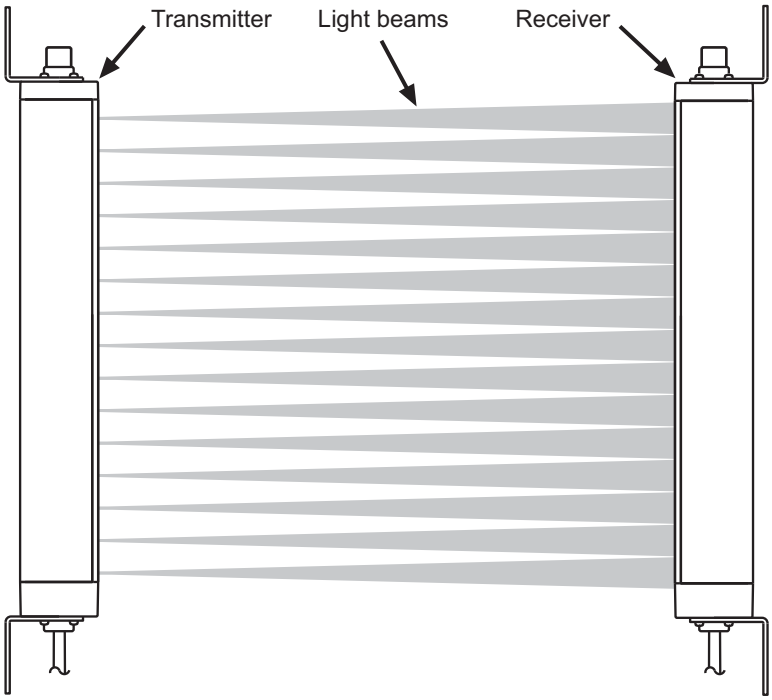

Figure 1-4. Shadow 8 Light Beams

Transmitter LEDs pulse in succession from end to end of the head. Each phototransistor in the receiver detects only the single pulse of light aligned with it and is only enabled at the instant that the beam is anticipated. Shadow 8's electronics must "see" the phototransistor turn "on," then "off" as the beam hits it and disappears. Each phototransistor must turn on, then off in sequence, or Shadow 8 will send a stop command to the guarded machinery. Between 7 and 9 consecutive beams on Main heads, depending on Shadow 8 model, and 2 consecutive beams on Extensions must be aligned and unobstructed at all times to allow receiver(s) and transmitter(s) to synchronize their sequencing (see *Shadow 8 LED Displays*, page 1-9 and *Programmable Fixed Blanking*, page 1-11).

Because the receiver only accepts infrared light pulses of a certain duration in proper sequence, Shadow 8 does not respond to other light sources, continuous or pulsed. Neither normal lighting near the curtain nor changes in area lighting nor even flashing strobe lights affect Shadow 8 operation.

Shadow 8 Object Sensitivity

Shadow 8 light beams are on 0.79-in. (20-mm) centers, enabling the light curtain to detect any object 1.18 in. (30 mm) in diameter or greater. An object smaller than 1.18 in. can pass undetected through Shadow's light field if it travels in a path directly between the light beams. This measure of minimum detection diameter is called the light curtain's "object sensitivity."

Object sensitivity is used in calculating the "safety distance," the distance from the hazardous area of the press that the optic heads must be mounted to allow enough time for the light curtain to react, and the press to stop, before the operator can penetrate the light curtain and reach the hazard (see *Calculating the Safety Distance*, page 2-2).

Shadow 8 and Control Reliability

⚠ WARNING

OBSERVE PROPER INSTALLATION PROCEDURES

- Install Shadow safety light curtains in compliance with applicable OSHA and ANSI safety regulations (extracts are provided in Appendix D).
- Refer to the latest revision of all applicable documents.
- Ensure that your installation meets the control reliability requirements of the applicable regulations.
- Ensure that both optional Shadow control box safety relays are used in any Shadow installation and that they are connected directly to the press control's stop circuit, to a PLC, or to another type of machine control. Wiring is explained in Chapter 2.
- Read carefully and understand the installation instructions before attempting to install and wire Shadows to any control.
- Ensure that installation is performed by qualified personnel.

Failure to comply with these instructions could result in death or serious injury.

⚠ WARNING

UNPROTECTED EQUIPMENT MAY CONTINUE TO OPERATE AFTER GUARDED PRESS STOPS

Ensure that all operators know which device(s) are protected by your Shadow safety light curtains and which are not. Though a protected press will stop when the Shadow light curtain is interrupted, associated feeds and conveyors not protected by Shadow will continue to operate after the press stops.

Failure to comply with these instructions could result in death or serious injury.

NOTICE

OSHA and ANSI have issued regulations for the use of presence-sensing devices such as Shadows. Both organizations require control reliability. See Appendix D for more information.

Shadow 8 is “control reliable” as defined by OSHA and ANSI. A control-reliable device must be “constructed so that a failure within the system does not prevent the normal stopping action from being applied to the press when required, but does prevent the initiation of a successive stroke until the failure is corrected” (OSHA 1910.217 (c) (3) (iii) (c)).

All critical components in Shadow 8 are duplicated so that if one component fails, its duplicate will still allow the guarded machinery to be stopped. When a component failure occurs, Shadow 8 immediately detects it and sends a stop signal to the machinery. The light curtain will not allow equipment to resume operation until repairs are made to the failed component.

The Shadow 8 receiver has two solid-state PNP safety outputs that source 24 Vdc when the sensing field is unobstructed. When an obstruction enters the field, Shadow’s circuitry instantly de-energizes the outputs. Safety outputs must be wired to either the optional Shadow 8 control or to a new WPC.

The Shadow 8 control has two cross-checked “captive contact” safety relays, one N/O (Normally Open), the other either N/O or N/C (Normally Closed). When an obstruction enters the field, Shadow’s control circuitry instantly de-energizes the relays, which results in opening the contacts and breaking the stop circuit of the press.

The new WPC clutch/brake control also has two “captive-contact” N/O safety relays. When an obstruction enters the sensing field while the machine is energized, WPC instantly de-energizes its relays, stopping the press.

Shadow 8’s response time from loss of light to relay contacts open (or de-energized) is 23 to 59 milliseconds, depending on configuration (see Table 1-1, page 1-13). Even if one of Shadow’s control relay contacts fails closed (i.e., the contact welds shut), the second relay will still de-energize and a stop signal will be sent to the machinery. Shadow 8 will also detect the failed relay and will not allow further press operation until the relay is replaced (see *Checking and Replacing Control Relays in Optional Shadow 8 Control Box*, page 4-9)

Shadow 8 LED Displays

Shadow 8 provides the following LED displays on the Main Receiver and Transmitter and on the optional control to provide information about light curtain operation.

- Three operating state LED indicators located on the pigtail end of the Main Receiver (see Figure 1-1).
- One status LED indicator located on the pigtail end of the Main Transmitter. When this yellow LED is lit, wiring connections between the Main Transmitter and the Wintriss Clutch/Brake control or Shadow 8 control are good.
- Red Individual Beam Indicator (IBI) LEDs next to each phototransistor on the receiver.
- Green power and safety relay LEDs on the cover of the optional control (see Figure 1-3).

Operating state LEDs provide the following information about Shadow 8 operation (see *Shadow 8 Operating States*, below):

- Machine Run/Stop (Green/Red) LED–When LED is green, light curtains are unobstructed. When LED is red, light curtains are obstructed or Shadow 8 has experienced an internal fault. The state of the yellow Interlock/Alarm LED (see next item) indicates which of these conditions applies.
- Interlock/Alarm (Yellow) LED–Light curtains are obstructed (LED lit continuously) or Shadow 8 has experienced an internal fault (LED flashing).
- Blanking Active (Amber) LED–Programmable fixed blanking and/or floating blanking feature has been enabled (see *Programmable Fixed Blanking*, page 1-11 and *Floating Blanking*, page 1-11). Fixed blanking is enabled by default.

The red Individual Beam Indicator LED next to each phototransistor on the receiver becomes lit whenever the light pulse from the corresponding beam on the transmitter is not detected. These LEDs indicate either a penetration of the light curtain or receiver/transmitter misalignment. When the required number of consecutive beams are not in alignment (see Table 2-13, page 2-50), alternate IBIs on the misaligned receiver(s) illuminate. Detailed instructions for using IBIs during alignment of Shadow 8 optic heads is provided starting on page 2-49.

Selected IBIs on the Main Receiver also illuminate whenever there is a fault condition, which is indicated by a continuously lit red Machine Run/Stop LED and a flashing Interlock/Alarm LED. Each digit of the fault code is represented by a string of consecutively illuminated, flashing IBIs. Each digit is separated by an unlit IBI and terminated by a string of unlit IBIs (see Figure 4-1, page 4-2 for an example). Fault codes are fully documented, including suggested remedies for each fault, in Chapter 4 of this manual.

When the amber Blanking Active LED is lit, indicating that programmable fixed blanking or floating blanking has been enabled, illuminated IBIs identify beams that have been programmed as a fixed blanking window. When the obstruction being blanked is present, the Machine Run/Stop LED is lit green. When the obstruction is removed, the IBIs defining that area of the light curtain remain lit, but the Machine Run/Stop LED turns red.

The Machine Run/Stop LED flashes red and the Blanking Active LED flashes amber at the same time whenever the number of beams the user is attempting to program in a fixed blanking window prevents the required number of consecutive beams from remaining unobstructed (see Table 3-1, page 3-6).

The Power LED on the optional Shadow 8 control, which is green, is illuminated when power is being applied to the unit. Illumination of the two green LEDs labelled “OSSD 1” and “OSSD 2” indicates that the safety relays are energized (i.e., closed). When the safety relays are de-energized (i.e., open), these two LEDs turn off.

Shadow 8 Operating States

Shadow 8 can be in one of five operating states:

- Curtains Unobstructed–The Machine Run/Stop LED is illuminated green, and the two safety relays are “closed” (i.e., energized).
- Curtains Obstructed–The Machine Run/Stop LED is illuminated red, and the two safety relays are “open” (de-energized).
- Interlock (Start/Restart Interlock operating mode–see *Shadow 8 Operating Modes*, below)–The Machine Run/Stop LED is illuminated red, the yellow Interlock/Alarm LED is lit, and the two safety relays are “open.” The Interlock state can only be cleared by removing the obstruction that tripped the light curtain and turning the Program/Run/Start key switch (see Figure 1-3, page 1-5) to the START position.
- Alarm–The Machine Run/Stop LED is illuminated red, the yellow Interlock/Alarm LED is flashing, and the two safety relays are “open.” The Alarm state can only be cleared by fixing the problem that caused the alarm, recycling power to Shadow 8 or turning the Program/Run/Start key switch to the START position, and waiting for the system to run a self-test.
- Blanking Object Removed–The amber Blanking Active LED is lit, the Machine Run/Stop LED is illuminated red, and the two safety relays are “open.” To clear this state, replace the object in its original position, which is defined by a consecutive string of illuminated IBIs, or program a new blanking window with a different object or no object.

Shadow 8 Operating Modes

You can set Shadow 8 to operate in either Automatic Start or Start/Restart Interlock mode.

In Automatic Start mode, Shadow 8 powers up in the Curtains Unobstructed state. When an object is detected in the sensing field, Shadow 8 changes from Curtains Unobstructed to Curtains Obstructed. After the object has been cleared, Shadow 8 automatically switches to the Curtains Unobstructed state.

In Start/Restart Interlock mode, Shadow 8 powers up in the Interlock state. To switch to Curtains Unobstructed, the operator must turn the Program/Run/Start key switch to START. When an object is detected in the sensing field, Shadow 8 changes from Curtains Unobstructed to Interlock. After the object has been cleared, Shadow 8 remains in the

Interlock state until the operator turns the key switch to the START position, and Shadow 8 switches to Curtains Unobstructed.

Start/Restart Interlock operating mode is particularly useful in perimeter guarding applications when there is a walk-in hazard inside the guarded area.

Additional details about operating mode and instructions for making operating mode settings are provided starting on page 3-3.

Programmable Fixed Blanking

Shadow 8 allows you to program an area within the sensing field into which a stationary fixture may protrude without triggering a Curtains Obstructed state and stopping the guarded machine. This programmed area, which is created by disabling the beams that normally protect it, is called a fixed blanking window.

Fixed blanking windows may span any number of beams as long as 7 to 9 consecutive beams on Main heads remain unblanked, depending on Shadow 8 model, and 2 consecutive beams remain unblanked on Extensions. (A minimum number of consecutive clear beams is necessary to allow Shadow 8 receiver(s) and transmitter(s) to synchronize their sequencing– see *Shadow 8 Operation*, page 1-6.)

Multiple fixed blanking windows can be programmed for a standalone pair of light curtains or for up to four pairs of optic heads as long as the consecutive number of clear beams rule is satisfied.

A detailed discussion of fixed blanking and instructions for programming a fixed blanking window are provided starting on page 3-4.

⚠ DANGER

DO NOT CREATE A FIXED BLANKING WINDOW GREATER THAN ONE BEAM UNLESS THE ENTIRE AREA BETWEEN TRANSMITTER AND RECEIVER IS OBSTRUCTED

Do not blank more than one beam unless the entire area between transmitter and receiver is blocked by a permanent fixture or is guarded.

Failure to comply with these instructions will result in death or serious injury.

If the obstruction being blanked is not large enough to extend all the way from transmitter to receiver, Shadow 8's minimum object sensitivity increases, and the safety distance must be increased accordingly. In this case, you should not program more than one beam as a fixed blanking window (see *Calculating the Safety Distance*, page 2-2).

Floating Blanking

Shadow 8's floating blanking feature allows you to disable one beam at any location along the length of the light curtain, letting any object 1 in. or smaller penetrate the sensing field in a random pattern without causing the light curtain to enter a Curtains Obstructed state. The single blanked beam may be used in any segment in a multi-segment installation.

A detailed discussion of floating blanking and instructions for enabling a one-channel blanking window are provided starting on page 3-7.

Programmable fixed blanking and floating blanking can be used at the same time (see page 3-9).

The light curtain's minimum object sensitivity (see page 1-7) increases when a light beam is "blanked," and the safety distance must be increased accordingly (see *Calculating the Safety Distance*, page 2-2).

Other Shadow 8 Features and Options

Shadow 8 is designed for uncompromising safety and durability under real world conditions. The light curtains have passed stringent environmental stress tests for shock, vibration, impact, exposure to temperature extremes, dust, humidity, and electrical abnormalities.

Shadow 8 comes with two auxiliary outputs that mimic the safety outputs. See *Wiring Auxiliary Output(s)*, page 2-44 for more information.

Shadow 8 optic heads come with universal mounting brackets attached at both ends (see Figure 1-1, page 1-3). Mounting brackets, which can be rotated ±8°, are used to properly align the Shadow 8 heads during installation. An additional bracket can positioned at the light curtain's midpoint with a T-slot mount to improve stability, and two brackets with T-slot mounts can be used instead of end brackets where mounting space is restricted. See *Universal Mounting Brackets*, page 2-15.

Shadow 8 options that you can purchase from Wintriss include mirrors for two- and three-sided guarding (see Figure 2-11 and Table 2-4, page 2-24) and stands for mounting optic heads and mirrors (see Figure 2-4 and Table 2-1, page 2-17).

Shadow 8 Maintenance

Shadow 8 continues working silently with no adjustment and little maintenance required. You should clean the lens window(s) periodically if the working environment is particularly dusty, dirty, oily or smoky (see *Checking and Cleaning Lens Windows*, page 4-7). You should also periodically verify proper alignment (see *Aligning and Tightening Down Shadow 8 Heads*, page 2-49 and *Checking Alignment*, page 4-7). If you are using the optional control, you will need to replace the relay board if a safety relay fails (see *Checking and Replacing Control Relays in Optional Shadow 8 Control Box*, page 4-9).

Specifications

Shadow 8 specifications are shown in Table 1-1.

Table 1-1. Shadow 8 Specifications

All specifications are the same for both Main and Extension units. Four segments (one Main and up to three Extensions) can be connected in series up to a maximum protection length of 202 in. For either transmitter or receiver, the length of heads and interconnect cabling, not including Main Cables, cannot exceed 110 ft.

Scanning heights	12.6 (320), 17.3 (440), 23.6 (600), 29.9 (760), 36.2 (920), 47.2 (1200), and 59.8 in. (1520 mm). 9.4 in. (240 mm) for Extensions only.
Scanning range	Default setting: 1 to 65 ft. (0.3 to 20 m) minimum. Can be set to “short range,” 1 to 26 ft. (0.3 to 8 m) minimum. May help in installations where cross-talk is a problem.
Beam spacing	0.79 in. (20 mm) centers
Object sensitivity	1.18 in. (30 mm) (use of fixed and/or floating blanking increases this value)
Response time	23 mS for up to 42 in. (1060 mm) combined length with extensions 32 mS for up to 85 in. (2160 mm) combined length with extensions 41 mS for up to 128 in. (3240 mm) combined length with extensions 50 mS for up to 171 in. (4340 mm) combined length with extensions 59 mS for up to 202 in. (5120 mm) combined length with extensions If light curtains are wired to optional Shadow 8 control, add 10 mS to response time for N/O safety relay outputs, 20 mS for N/C output.
Size Optic heads Control box	 See Figure 2-6 and Table 2-2, page 2-19, and Figure 2-7, page 2-20. 7.4 x 10.8 x 2.8 in. (189 x 274 x 70 mm). See Figure 2-19, page 2-30.
Construction Heads Control Cables	 Extruded aluminum; 0.1 in. (2.6 mm) wall min. 14-gauge, .081 in. (2 mm) welded steel with enclosure clasp 16 ft. (5 m), 33 ft. (10 m), 50 ft. (15 m), and 100 ft. (30 m) with connector on one end for attachment to pigtails on Main Receiver and Transmitter 1 ft. (0.3 m), 3 ft. (1 m), 6 ft. (2 m), 10 ft. (3 m), 16 ft. (5 m), and 33 ft. (10 m) with connectors on both ends for attachment to Main or Extension Heads
Environmental Heads Control Cables Vibration Shock testing	 IP65 IP65 NEMA 4 connector; oil-resistant PVC cable standard 10-55 Hz maximum on all three axes. 10 g for 0.016 seconds; 1,000 shocks for each of three axes.

Table 1-1. Shadow 8 Specifications (Cont.)

Operating Temperature	32° to 131° F (0° to 55° C)
Inputs	
Heads	
Power	24 Vdc, 2.1 A max.
	Up to 4 sets (one Main and up to three Extensions) can be connected in series as long as total length of heads does not exceed 202 in. (5120 mm). For either transmitter or receiver, total length of heads and interconnect cabling, not including Main Cables, cannot exceed 110 ft. (33 m).
Optional control	
Power	100-240 Vac; .6 A max; 50-60 Hz
EDM Monitor (MPCE)	For external dry contacts rated at 50 mA @ 24 Vdc. EDM is also known as MPCE.
Light Source	Infrared light-emitting diodes (LEDs), approximately 880 nanometer wavelength
Optics	Angle of Divergence and Acceptance: ± 2.5°.
Outputs	
Heads	
Safety	2 Solid-State PNP, each sourcing 625 mA @ 24 Vdc, short-circuit-protected
Auxiliary (Non-safety)	1 Solid-State PNP, “Follow” mode only, sourcing 100 mA @ 24 Vdc
Optional Control Box	
Safety	2 cross-checked “captive contact” stop relays, one N/O, the other N/O or N/C, rated for 6 A @ 250 Vac or 6 A @ 30 Vdc
Auxiliary (Non-safety)	2 auxiliary outputs, N/O or N/C, “Follow” mode only, rated for 5 A @ 250 Vac or 5 A @ 30 Vdc
Indicators	Operating state LED indicators on Main Receiver: Amber–fixed or floating blanking enabled; Yellow–interlock or fault; Red–curtain obstructed/stop signal; Green–curtain unobstructed.
	Individual Beam Indicator LEDs (red) on Main and Extension Receivers.
	Operating state LED indicator on Main Transmitter: Yellow–active.

Chapter 2. Installation and Checkout

⚠ DANGER

OBSERVE PROPER INSTALLATION, OPERATION, AND MAINTENANCE PROCEDURES

- Follow all procedures in this manual to ensure proper operation of the light curtain.
- Ensure that the light curtain is installed so it is impossible for anyone to reach over, under, or around it and into the hazardous area of the machine without being detected. Use a light curtain of the correct height in combination with physical guards.
- Install and maintain your machine guarding system according to OSHA standard 1910.212 and any other regulations and standards that apply.
- Wire and install Shadow 8 safety light curtains in accordance with the requirements of OSHA lockout/tagout regulation 1910.147.
- Ensure that Shadow 8 safety light curtains are installed, tested and repaired by a qualified person. Only a qualified person should possess keys, special tools, or other means needed to gain access to the control and modify the configuration of the Shadow light curtain.
- Perform only the tests and repairs listed in this manual.
- Test the operation of your Shadow safety light curtain, using the test procedure shown on the Shadow safety light curtain control box and also included in this manual (see page 2-55).
- Perform the checkout and test procedures after any maintenance is done on the Shadow safety light curtain.
- Ensure that supervisors, die-setters, maintenance persons, machine operators, foremen, or any other individuals responsible for the proper operation of the machinery have read and understood all instructions in this manual pertaining to the use of Shadow 8 safety light curtains.

Failure to comply with these instructions will result in death or serious injury.

⚠ DANGER

MAKE SURE TO PERFORM SAFETY SYSTEM TESTS

- Perform the checkout and test procedures (see page 2-55) when you have completed installation of your light curtain and before operating the equipment it is connected to.
- Operate your machinery only after your safety system meets all the requirements of the checkout sequence.
- Perform the test procedure whenever repair, maintenance or modification is performed on your light curtain or the machinery it is connected to.

Failure to comply with these instructions will result in death or serious injury.

⚠ WARNING

GUARD AGAINST ELECTRIC SHOCK HAZARD

- Turn off and disconnect power from the Shadow 8 safety light curtain and from the machinery it is connected to, including the machine control and motor, before making any wiring connections.
- Remove all fuses and “tag out” per OSHA 1910.147 Control of Hazardous Energy (Lockout/Tagout).
- Ensure that installation is performed by qualified personnel.

Failure to comply with these instructions could result in death or serious injury.

Installing Shadow 8 is a straightforward procedure. However, you must install the unit with care since Shadow 8 is a safety device that protects press operators and other personnel.

Before proceeding, make sure that you received the following items in your Shadow 8 order:

- Two optic heads (Main Transmitter and Main Receiver)
- A remote control box (if included in order)
- Two quick-disconnect cables, one for each optic head (required cable lengths specified at time of order).
- Extension heads and interconnect cables (if included in order)

If any of these components is missing, contact Wintriss Tech. Support before starting installation.

NOTICE

Instructions must be followed exactly for proper installation of Shadow 8.

Calculating the Safety Distance

⚠ DANGER

OBSERVE THE CORRECT SAFETY DISTANCE

- Calculate the safety distance carefully, following the instructions below, and mount your light curtain heads at least the calculated distance from the hazardous area.
- Mount your light curtain heads at least 7.5 in. (191 mm) from the hazardous area regardless of the calculated safety distance.

Failure to comply with these instructions will result in death or serious injury.

⚠ DANGER

OBSERVE CORRECT SAFETY DISTANCE WHEN USING FIXED OR FLOATING BLANKING

- Read *Increasing Safety Distance To Compensate for Blanking Windows*, page 2-10 before calculating the safety distance. This section explains how to modify the safety distance when you use programmable fixed blanking or floating blanking windows.
- Modify the calculated safety distance as required.

Failure to comply with these instructions will result in death or serious injury.

⚠ DANGER

ADJUST SAFETY DISTANCE TO COMPENSATE FOR LONGER RESPONSE TIME

Determine which model Shadow 8 safety light curtains you have, and use the correct response time for your model light curtain, as shown below, in your safety distance calculations. If you are using the optional Shadow 8 control, add 10 mS to these response times for N/O safety relay connections, 20 mS for N/C relay connections.

Up to 42 in.	23 mS response time
Up to 85 in.	32 mS response time
Up to 128 in.	41 mS response time
Up to 171 in.	50 mS response time
Up to 202 in.	59 mS response time

Safety depends on your installing your light curtain at the correct safety distance from the hazardous area.

Failure to comply with these instructions will result in death or serious injury.

⚠ DANGER

USE BRAKE MONITOR TO CHECK STOPPING TIME

Use a brake monitor where a Shadow 8 light curtain is installed to protect operators whose hands are routinely exposed to a hazardous area, as required by OSHA 1910.217 (c) (3) (5). A brake monitor continually checks that the machine's stopping time does not exceed a predetermined limit.

Failure to comply with these instructions will result in death or serious injury.

The "safety distance," as shown in Figure 2-1, is the distance away from the pinch point (or hazardous area) of the press that the Shadow 8 heads must be mounted to allow enough time for Shadow 8 to react, and the press to stop, before the operator can penetrate the light curtain and reach the hazard. The "pinch point" is the area of the press where moving parts can cause injury.

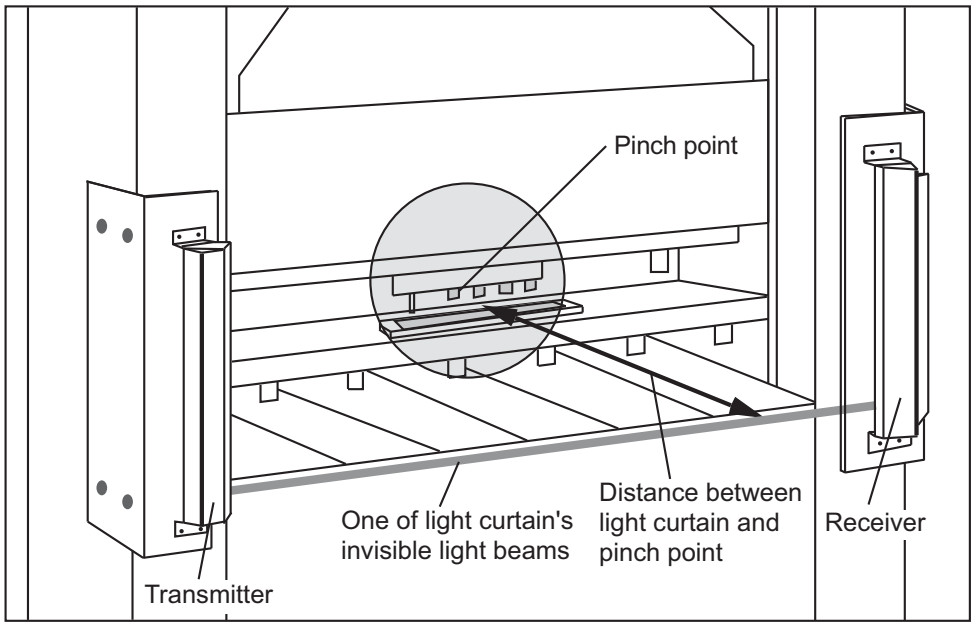

Figure 2-1. Safety Distance: Distance between Pinch Point and Light Curtain

The safety distance is calculated using a formula that incorporates the stopping time of your press. You must mount your light curtains slightly beyond this calculated distance to ensure that Shadow 8 is able to stop the press before an operator's hand reaches the hazardous area.

OSHA and ANSI Requirements

OSHA regulations, ANSI standards, and CSA mandate that all machine safeguarding devices, including Shadow 8, be located at the correct safety distance from the pinch point. OSHA regulation 1910.217 governs the mounting of infrared light curtains to protect mechanical power presses. The OSHA formula contained in this regulation has been used as a guide in other applications as well since there has been no well-known formula for safety distance which governs general machine guarding.

Wintriss, however, recommends that you use the formula contained in ANSI standard B11.1-2009. This standard has been developed specifically for guarding of mechanical power presses, and the formula contained in B11.1-2009 represents a new consensus on the proper installation of light curtains. The standard should be used as a guide in other applications as well.

For complete information on OSHA regulation 1910.217 and ANSI standards B11.1-2009 and B11.19-2003, see Appendix D.

OSHA and ANSI formulas are explained below. If you need additional assistance in calculating the safety distance, call Wintriss Tech. Support.

OSHA Safety Distance Formula

⚠ DANGER

OBSERVE THE CORRECT SAFETY DISTANCE

- Calculate the safety distance carefully, following the instructions below, and mount your light curtain heads at least the calculated distance from the hazardous area.
- Mount your light curtain heads at least 7.5 in. (191 mm) from the hazardous area regardless of the calculated safety distance.
- Be sure your value for Ts includes the response times of all devices that react to stop the press. If your measurement of stop time does not include response time of the press control, light curtain, and any other devices that react to stop the press, the safety distance will be too short.
- Enabling floating blanking increases the depth penetration factor (Dpf) and, therefore, will increase your safety distance. Enabling fixed blanking may also increase Dpf and safety distance.

Failure to comply with these instructions will result in death or serious injury.

⚠ DANGER

USE BRAKE MONITOR TO CHECK STOPPING TIME

Use a brake monitor where a Shadow 8 light curtain is installed to protect operators whose hands are routinely exposed to a hazardous area, as required by OSHA 1910.217 (c) (3) (5). A brake monitor continually checks that the machine's stopping time does not exceed a predetermined limit.

Failure to comply with these instructions will result in death or serious injury.

NOTICE

Wintriss recommends that you use the American National Standards Institute formula for calculating safety distance because it contains more factors, allowing you to calculate the safety distance more precisely. The ANSI formula is explained in the next section (see page 2-6).

The OSHA safety distance formula as specified in OSHA 1910.217 is

$$Ds = K \times Ts$$

where

Ds *is the OSHA safety distance in inches*

K *is the OSHA-recommended hand-speed constant of 63 inches-per-second*

Ts *is the stopping time of the press in seconds*

The hand-speed constant indicates how far you could theoretically move your hand and arm in one second.

The stopping time **Ts** must be measured at approximately 90° of crankshaft rotation (or at maximum velocity) and include all the following parameters:

- Response time of the press control that activates the brake
- Response time of the light curtain (see specifications in Table 1-1, page 1-13)
- Response time of other devices involved in stopping the press

Since some increase in stop time can invariably be anticipated due to clutch/brake system deterioration, a percentage factor must also be added to the actual measured stop time of your press when determining the safety distance.

A factor of 20 percent is recommended for presses with brakes that are new or in good condition. A 10-percent factor is recommended for presses with older brakes. Since the stopping time for older brakes is longer due to wear, less time needs to be added.

An example of calculating the safety distance using the OSHA formula

The OSHA formula for calculating the safety distance is:

$$Ds = 63 \times Ts$$

We will use a stop time of 0.190 seconds for this example. This includes the reaction time of all devices noted above in signaling the press to stop except the response time of the light curtain. Next we will add the Shadow 8 response time and the braking percentage factor. We will use a worst-case response time of .059 seconds for a Shadow 8 system with a protected length of between 172 in. and 202 in. We will assume that our brakes are new and add 20% to the stop time measurement (.20 x 0.190 = .038). Then:

Ts = .190 sec.	+ .059 sec. Shadow 8 response time	+ .038 sec. braking factor

Ts = .287 sec.

Now, we will calculate safety distance:

$$Ds = 63 \times Ts$$

$$Ds = 63 \times .287$$

$$Ds = 18.08 \text{ in.}$$

Using the OSHA formula, we have calculated that Shadow 8 heads must be mounted at least 18.08 in. from the hazardous area.

ANSI Safety Distance Formula

⚠ DANGER

OBSERVE THE CORRECT SAFETY DISTANCE

- Calculate the safety distance carefully, following the instructions below, and mount your light curtain heads at least the calculated distance from the hazardous area.
- Mount your light curtain heads at least 7.5 in. (191 mm) from the hazardous area regardless of the calculated safety distance.
- Be sure your value for Ts includes the response times of all devices that react to stop the press. If your measurement of stop time does not include response time of the press control, light curtain, and any other devices that react to stop the press, the safety distance will be too short.
- Enabling floating blanking increases the depth penetration factor (Dpf) and, therefore, will increase your safety distance. Enabling fixed blanking may also increase Dpf and safety distance.

Failure to comply with these instructions will result in death or serious injury.

⚠ DANGER

USE BRAKE MONITOR TO CHECK STOPPING TIME

Use a brake monitor where a Shadow 8 light curtain is installed to protect operators whose hands are routinely exposed to a hazardous area, as required by OSHA 1910.217 (c) (3) (5). A brake monitor continually checks that the machine's stopping time does not exceed a predetermined limit.

Failure to comply with these instructions will result in death or serious injury.

The ANSI B11.1 safety distance formula, which is recommended by Wintriss, is

$$Ds = K \times (Ts + Tc + Tr + Tbm) + Dpf$$

where

Ds *is the ANSI safety distance in inches*

K *is the OSHA-recommended hand-speed constant of 63 inches per second*

Ts *is the stopping time of the press (or other machine) in seconds*

Tc *is the response time of the press control or other machine control*

Tr *is the response time of the light curtain*

Tbm *is the additional stopping time of the press (or other machine) allowed by the brake monitor*

Dpf *is the depth penetration factor*

This formula is similar to the OSHA formula except that it incorporates additional variables (i.e., response times, brake monitor setting, and depth penetration factor).

The hand-speed constant indicates how far you could theoretically move your hand and arm in one second.

Ts, **Tc**, and **Tr** are the worst-case response times of the press (or other machine), of the control, and of the light curtain. The response time of the press **Ts** is measured at approximately 90° of crankshaft rotation, or at maximum closing velocity. The response time of the control **Tc** is the time it takes for the control to activate the press's brake. The response time **Tr** for Shadow 8 is between 23 mS (for protected lengths up to 42 in.) and 59 mS (for lengths between 171 in. and 202 in.

Tbm is additional time added to the other response times in the ANSI formula to reflect brake wear. It is calculated as follows:

Tbm = brake monitor setting – (Tc + Ts)

The brake monitor setting is a preset value that, when exceeded, causes the press control (or other control) to automatically stop the press. When the preset value is reached, it indicates that excessive brake wear has occurred, and it is time for repair of the brake.

See instructions for your brake monitor to determine the proper brake monitor setting. Generally, the setting is 120% of the measured stopping time (Tc + Ts) when your brakes are new. It is 110% of the stopping time (Ts + Tc) for older brakes.

The depth penetration factor **Dpf** equals 3.07 in. (78.0 mm). This is a measure of how far an object, like an operator's hand, can move through the light curtain before the light curtain reacts. **Dpf** is related to the object sensitivity.

Object sensitivity is the smallest diameter object that Shadow 8 can detect anywhere in its field. Object sensitivity **(S)** for Shadow 8 is 1.18 in. (30 mm) with beam centers of 0.79 in. (20 mm). An object smaller than 1.18 in. diameter could pass through the light field if it traveled in a path directly between the light beams.

For instructions on calculating the safety distance with one beam blanked, refer to *Increasing Safety Distance To Compensate for Blanking Windows*, page 2-10.

An example of calculating the safety distance using the ANSI formula

The ANSI formula for calculating safety distance is

Ds = K x (Ts + Tc + Tr + Tbm) + Dpf

Let's use the following numbers for our variables in the formula:

K = 63 inches per second

Ts + Tc = 0.190 sec.

We include Ts and Tc together because many stop time measuring devices measure the stopping time of the press control as well as the stopping time of the clutch/brake mechanism.

Tr = .059 sec.

Tbm = 0.228 sec. – 0.190 sec = .038 sec.

Dpf = 3.07

Now let's put our numbers into the formula:

Ds = 63 x (0.190 + .059 + .038) + 3.07

Ds = (63 x .287) + 3.07

Ds = 18.08 + 3.07

Ds = 21.15 in.

The distance from the pinch point that the light curtain must be mounted is 21.15 in.

When using the ANSI safety distance formula, be sure to perform calculations in the following order:

(1) Add Ts + Tc + Tr + Tbm first.

(2) Multiply the result by 63.

(3) Add this result to Dpf. This is Ds.

If you do not follow this order, your safety distance calculation will be incorrect.

European Safety Distance Formulas

There are two European safety distance formulas: one for systems with a minimum object resolution of 40 mm or less, the other for systems with a minimum object resolution of greater than 40 mm. Formulas are based on standard EN999.

Formula for Systems with Object Resolution of 40 mm or Less

When the minimum object resolution of the light curtain is 40 mm or less, use the following formula to calculate the safety distance:

S = (K x T) + C

where:

S = the minimum distance in millimeters from the pinch point to the sensing point, line, plane or field

K = 2000 mm/s

T = the overall system stopping performance in seconds

T = t1 + t2

t1 = response time of the safety light curtain in seconds

t2 = maximum stopping time of the machine in seconds

C = 8(d-14 mm), but not less than zero

d = the minimum object sensitivity of the light curtain in millimeters

In other words:

S = (2000 mm/s x T) + 8(d - 14 mm)

This formula applies for all minimum distances of *S* up to and including 500 mm. The minimum value of *S* cannot be less than 100 mm.

If *S* is found to be greater than 500 mm, using the formula above, then the following formula can be used.

$$S = (1600 \text{ mm/s} \times T) + 8(d - 14 \text{ mm})$$

In this case, the minimum value of *S* cannot be less than 500 mm.

Formula for Systems with Object Resolution Greater than 40 mm

When the minimum object resolution of the light curtain is greater than 40 mm, as when you are using blanking windows (see *Increasing Safety Distance To Compensate for Blanking Windows*, page 2-10), use the following formula to calculate the safety distance:

$$S = (K \times T) + C$$

where:

S = the minimum distance in millimeters from the pinch point to the sensing point, line, plane or field

K = 1600 mm/s

T = the overall system stopping performance in seconds

T = t1 + t2

t1 = response time of the safety light curtain in seconds

t2 = maximum stopping time of the machine in seconds

C = 850 mm

In other words:

$$S = (1600 \text{ mm/s} \times T) + 850 \text{ mm}$$

Factors Affecting the Safety Distance Formula

When light curtains are used for machine initiation, their minimum object resolution must be 30 mm or smaller (based on EN999; other standards may vary). In this case, the formula given in *Formula for Systems with Object Resolution of 40 mm or Less*, above, applies except that the minimum distance *S* must be greater than 150 mm. The formula for C becomes:

$$C = 1200\text{mm} - (0.4 \times H), \text{ but not less than } 850 \text{ mm}$$

where:

H = the height of the sensing field above the floor in mm

Increasing Safety Distance for Perimeter Guarding

⚠ DANGER

DO NOT INSTALL CONTROL INSIDE THE GUARDED AREA FOR PERIMETER GUARDING

The Shadow 8 control must be placed outside the guarded area for perimeter guarding applications. The guarded machine must only be restarted using a switch located outside and with a full view of the area of hazardous motion. Use of Start/Restart Interlock operating mode (see page 3-3) is suitable for this type of application.

Failure to comply with these instructions will result in death or serious injury.

For perimeter safeguarding, there is another consideration: personnel might be walking while simultaneously reaching into a safeguarded area. Although there is no commonly accepted "walking speed constant" like the "hand constant," you might use ergonomic tables or possibly even 100 inches per second, which is a conservative European "speed constant." For perimeter guarding, the formula would be:

$$D_s = (100) \times (T_s + T_c + T_r + T_{bm}) + D_{pf}$$

Increasing Safety Distance To Compensate for Blanking Windows

When you activate a fixed or a floating blanking window, you must increase the calculated safety distance for each beam that is blanked. Blanking increases the light curtain's object sensitivity, the minimum diameter object that the light curtain can detect, and, therefore, the depth penetration factor used in the ANSI safety distance formula.

When blanking is inactive, Shadow 8 can sense an object 1.18 in. (30 mm) in diameter. The depth penetration factor (**Dpf**) with no beams blanked is 3.07 in. (78 mm).

In order to prevent vibration from activating the light curtain unnecessarily, Shadow 8 has been designed to allow some flexibility in the area covered by programmable fixed blanking windows. Each fixed blanking window has a positional tolerance of ± 1 beam, allowing a 1-beam window, for example, to expand to 2 beams or contract to no beams without causing a Curtains Obstructed operating state. As a result, when determining the safety distance for a fixed blanking window, you must include an additional beam in your calculations.

⚠ DANGER

DO NOT CREATE A FIXED BLANKING WINDOW GREATER THAN ONE BEAM UNLESS THE ENTIRE AREA BETWEEN TRANSMITTER AND RECEIVER IS OBSTRUCTED

Do not blank more than one beam unless the entire area between transmitter and receiver is blocked by a permanent fixture or is guarded.

Failure to comply with these instructions will result in death or serious injury.

Each beam you program as a fixed blanking window creates an additional 1.58 in. (40 mm) gap in the light field (i.e., 2 x 20 mm, the space between beams). For a one-beam fixed blanking window, therefore, Shadow 8's object sensitivity is 2.76 in. or 70 mm (1.18 in.+ 1.58 in.), and the **Dpf** is 8.45 in. (214.6 mm). Using this new depth penetration factor in the

ANSI safety distance formula, a one-beam fixed blanking window increases the safety distance by approximately 5.38 in. (136.6 mm).

Beyond one beam, the object sensitivity for a fixed blanking window becomes large enough for an entire arm to penetrate the light curtain without being detected, and 36 in. must be added to the safety distance.

⚠ DANGER

DO NOT CREATE A FIXED BLANKING WINDOW GREATER THAN ONE BEAM UNLESS THE ENTIRE AREA BETWEEN TRANSMITTER AND RECEIVER IS OBSTRUCTED

Do not blank more than one beam unless the entire area between transmitter and receiver is blocked by a permanent fixture or is guarded.

Failure to comply with these instructions will result in death or serious injury.

The safety distance does not need to be increased if the area programmed as a fixed blanking window is entirely blocked by a fixture such that operator intrusion into this area is impossible. For instance, you might have a work table that juts out into the light field but takes up the whole space between the transmitter and receiver that is “blanked” and, therefore, unprotected by the light curtain.

Shadow 8’s one-beam floating blanking window does not have a positional tolerance. To calculate the safety distance for a one-beam floating window, add the space between beams (i.e., 0.79 in., or 20 mm) to Shadow’s object sensitivity with no beams blanked (i.e., 1.18 in., or 30 mm) to get an adjusted object sensitivity of 1.97 in. (50 mm). This yields a **Dpf** of 5.76 in. (146.3 mm), or a 2.69 in. (68.3 mm) safety distance increase for the one-beam floating blanking window.

Since Shadow 8’s floating blanking window may be used in any segment in a multi-segment installation (see *Setting a Floating Blanking Window*, page 3-7), the safety distance for every segment must be increased by 2.69 in. (68.3 mm).

NOTICE

MARK CORRECT MINIMUM OBJECT RESOLUTION ON SERIAL NUMBER LABELS

During installation strike out with a permanent marker the minimum object resolutions printed on the serial number labels of receivers and transmitters that do not apply to your system. Make sure to adjust the object resolution based on any blanking windows that have been set (see *Increasing Safety Distance To Compensate for Blanking Windows*, page 2-10). Four object resolutions are printed on each label.

Providing Pass-through Protection within the Safety Distance

⚠ DANGER

PREVENT OPERATOR FROM BEING ABLE TO STAND BETWEEN LIGHT CURTAIN AND HAZARDOUS AREA

Ensure that the operator cannot position himself or herself between the light curtain and the hazardous area. Use another pair of light curtains or a mechanical barrier at knee to waist height to prevent the operator or a passerby from being trapped between the light curtain and the hazard.

Failure to comply with these instructions will result in death or serious injury.

"Pass-through protection" must be provided for areas within the calculated safety distance in which operators may have to move. For safety distances of 6 in. or more, there is a danger that the operator could become trapped between the light curtain and the pinch point.

A recommendation would be to install a second set of light curtains at waist height mounted horizontally between the vertical light curtain and the hazard (see Figure 2-2, below). The length of the horizontal light curtain should be the minimum needed to detect the thinnest operator standing between the vertical light curtain and pinch point. For example, a 9.4-in. extension light curtain located in the center of a 12 in. safety distance at waist height should be adequate.

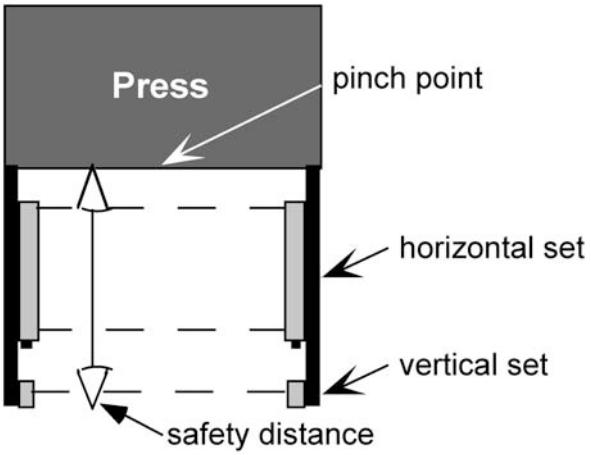

Figure 2-2. Plan View of Pass-through Protection

With Shadow 8, two sets of optic heads can be wired to the same WPC press control or optional Shadow 8 control box, making this configuration easily implemented.

All areas between the light curtains and pinch point that are not guarded by Shadow 8 must be protected by supplemental guarding (see Figure 2-3, page 2-13).

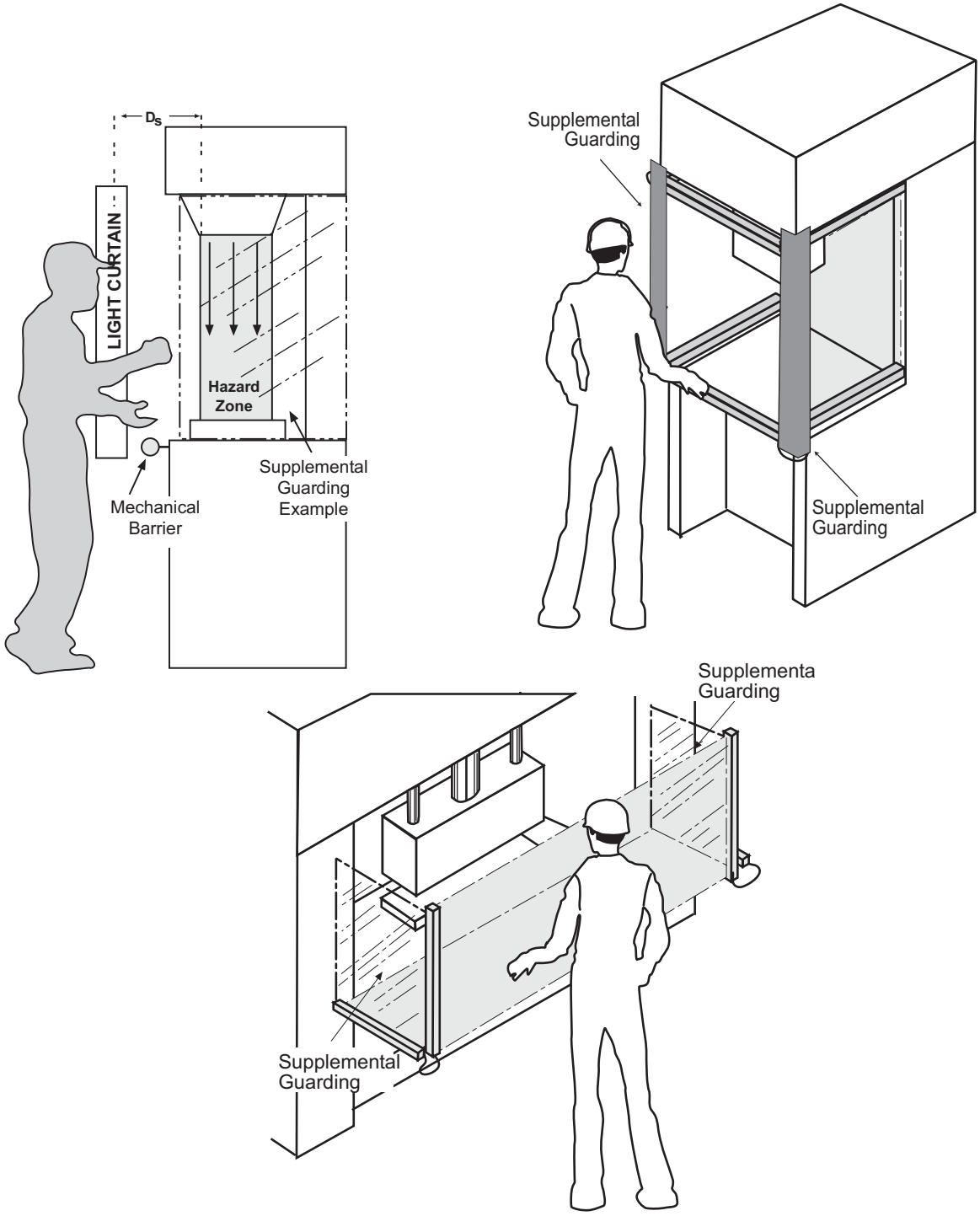

Figure 2-3. Supplemental Guarding

Height Considerations

⚠ DANGER

AVOID IMPROPER INSTALLATION

Ensure that the light curtain is installed so it is impossible for anyone to reach over, under, or around it and into the hazardous area of the machine without being detected (see Figure 2-3, page 2-13). Use the correct height light curtain, combined with ancillary physical guards.

Failure to comply with these instructions will result in death or serious injury.

⚠ DANGER

PREVENT OPERATOR FROM BEING ABLE TO STAND BETWEEN LIGHT CURTAIN AND HAZARDOUS AREA

Ensure that the operator cannot position himself or herself between the light curtain and the hazardous area. Use another pair of light curtains or a mechanical barrier at knee to waist height to prevent the operator or a passerby from being “trapped” between the light curtain and the hazard.

Failure to comply with these instructions will result in death or serious injury.

Once you have determined the correct safety distance, you must determine the proper height for your light curtains. Light curtains must be installed so it is impossible for anyone to reach over, under, or around them and into the hazardous area without being detected. It is essential, therefore, to select light curtains of the right length combined with ancillary physical guards. Shadow 8 comes in sizes ranging from 9.4 in. to 59.9 in.

Special Requirements for Presence Sensing Device Initiation (PSDI) for Machines Other Than Mechanical Power Presses

Presence Sensing Device Initiation (PSDI) is a configuration in which the light curtain is used to start a machine other than a mechanical power press after an object is removed from the sensing field. Use of PSDI places additional requirements on guarding and safety controls. PSDI does not allow using certain light curtain features such as extensions (to guard additional sides of a machine), mirrors, programmable fixed blanking, and floating blanking. Contact Wintriss Tech. Support for further information. Good sources of reference for PSDI include ANSI RIA 15.06-1999 and ANSI B11.2-1995 (R2000).

Designing and Installing Mounts for Optic Heads

Once you have calculated the correct safety distance, you are ready to install mounts for your Shadow 8 transmitter and receiver.

Universal Mounting Brackets

Universal mounting brackets are attached by screws to both ends of Shadow 8 transmitters and receivers (see Figure 2-7, page 2-20). By loosening the screws that secure them, you can rotate mounts ±8° to facilitate installation and alignment. If you need to pivot a bracket more than 8°, you must remove the screws, realign the mounting holes on the bracket with the screw holes on the head, and screw the bracket back down. Brackets can positioned every 45° around the perimeter of the head.

One or more universal brackets can also be installed along the length of the light curtain heads, using an optional T-slot mounting, as shown in Figure 2-8, page 2-20. A single bracket with T-slot mounting hardware can be purchased for use with existing end brackets on longer heads to provide greater stability. Wintriss recommends using this extra bracket on Shadow 8 heads 47.4 in. and longer. For applications where space restrictions prevent installation of end-mounted brackets, two brackets with T-slot mounting hardware can be ordered as an alternative.

You can mount Shadow 8 universal brackets parallel or perpendicular to the light beam. Perpendicular mounting is typical on gap frame presses.

Mounting Location Requirements

⚠ DANGER

AVOID IMPROPER INSTALLATION

Ensure that the light curtain is installed so it is impossible for anyone to reach over, under, or around it and into the hazardous area of the machine without being detected. Use the correct height light curtain, combined with ancillary physical guards.

Failure to comply with these instructions will result in death or serious injury.

⚠ DANGER

PREVENT OPERATOR FROM BEING ABLE TO STAND BETWEEN LIGHT CURTAIN AND HAZARDOUS AREA

Ensure that the operator cannot position himself or herself between the light curtain and the hazardous area. Use another pair of light curtains or a mechanical barrier at knee to waist height to prevent the operator or a passerby from being “trapped” between the light curtain and the hazard.

Failure to comply with these instructions will result in death or serious injury.

The mounting location you choose for your Shadow 8 heads must meet the following requirements:

- It must be impossible for anyone to reach over, under, or around the light curtains and into the hazardous area of the press without being detected.
- Light curtains should not be mounted near pathways used by forklifts, die carts, and other material-handling equipment.
- The mounting location must allow unobstructed access to the point-of-operation.
- Light curtains must be mounted an adequate safety distance from the pinch point to allow time for the press to stop once the light curtain has been interrupted (see *Calculating the Safety Distance*, page 2-2).
- The mounting location must be chosen so that every route to the press's pinch point or hazardous area is guarded.

  The Shadow 8 Main Transmitter and Receiver by themselves provide guarding on one side of the press. Mirrors used with Shadow 8 can provide 3-sided protection by "bending" the light curtain around the hazardous point-of-operation. Extension heads can also be used for multi-sided guarding. When Shadow 8 mirrors or Extensions are not used in conjunction with the Main light curtains, however, other guarding means, such as mechanical side-guards, must be substituted for them, in accordance with OSHA/ANSI guidelines.

Designing and Installing Mounting Brackets and Floor Stands

Shadow 8 light curtains can be mounted on floor stands or to brackets on your machinery, using the Shadow 8 universal mounting brackets on the top and bottom of each unit.

Stands in various heights are available from Wintriss (see Figure 2-4 and Table 2-1, page 2-17). Wintriss does not supply brackets, so you must provide your own.

Information about designing and mounting your own brackets as well as where you can buy brackets is available from Wintriss Tech. Support.

Brackets and stands must meet the following conditions:

- They must provide a rigid mounting surface for the Shadow 8 heads. Brackets must be made of strong, thick steel. Stands must be rigidly attached to the floor.
- They must bring the heads out far enough from the point of operation so that they are at or beyond the calculated safety distance.
- They must allow the heads to be easily aligned.
- They must allow shock mounts to be used to install the optic heads. Four shock mounts are shipped with each head.

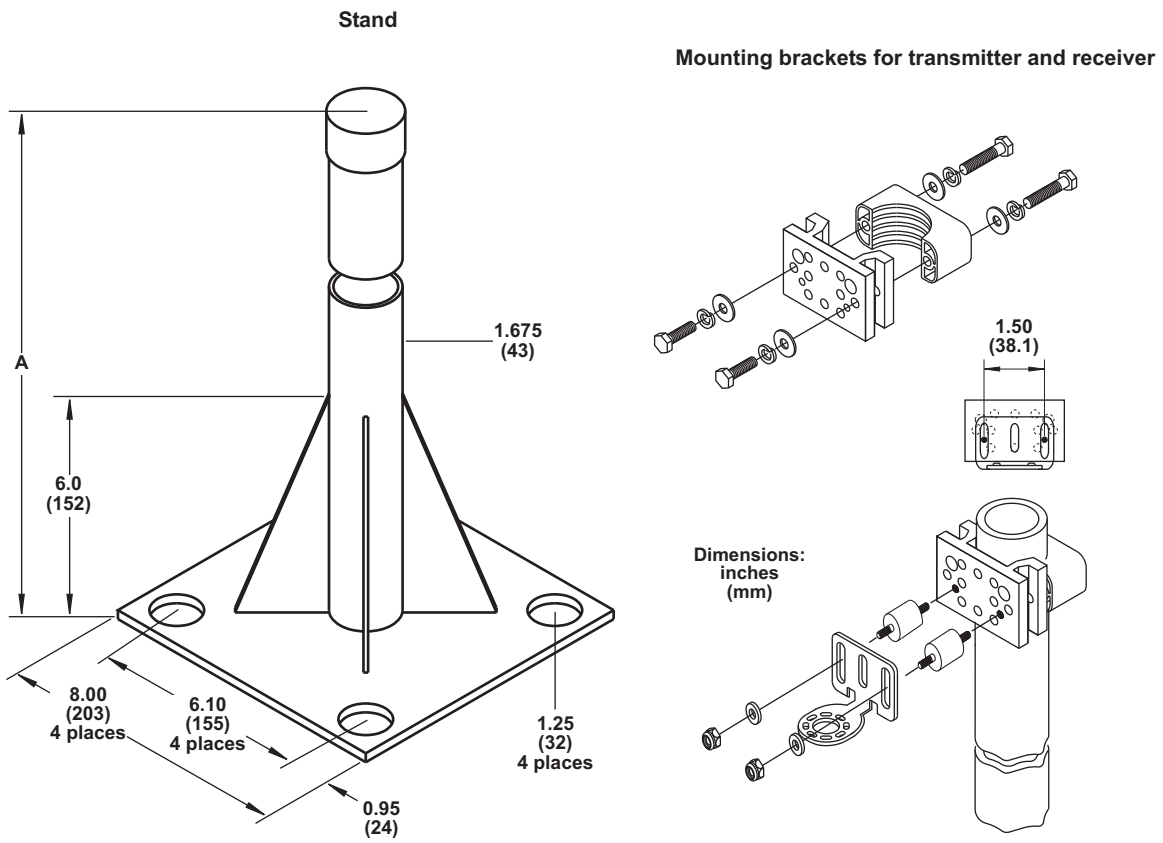

Figure 2-4. Shadow 8 Stand Dimensions (Shown with Mounting Brackets for Heads)

Table 2-1. Shadow 8 Stand Height and Weight

Height in Ft. (M) (A in Figure 2-4)	Weight in Lbs. (Kg)
4 (1.2)	19.3 (8.8)
6 (1.8)	24.7 (11.2)
8 (2.4)	30.1 (13.7)

Brackets must be designed to fit the shape of your particular press. For instance, on straight-side presses you can mount angle iron (L-shaped) brackets directly to a sidewall of the press. On gap-frame presses, you may have to mount the light curtains on the bed or platform of the press. Figure 2-5, page 2-18 shows some examples of bracket designs.

On gap-frame presses, do not attach the top Shadow 8 bracket to the press frame and the bottom bracket to the bolster. The upper portion of the press will deflect (pull away) from the bolster during the work portion of the stroke.

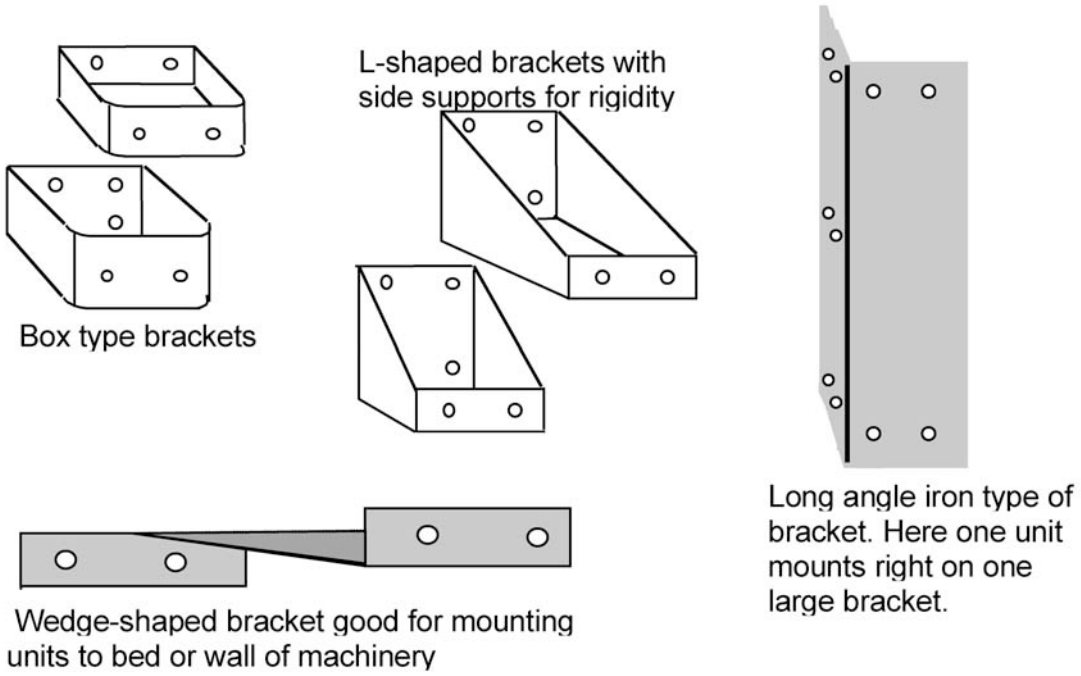

Figure 2-5. Light Curtain Mounting Bracket Types

Both ends of the Shadow 8 optic heads must be attached to mounting brackets so that vibration does not cause the units to go out of alignment. Brackets themselves may be attached to your press at one end only, to the bolster of the press, for instance.

NOTICE

In applications where light curtains will be exposed to shock and vibration, it is recommended that you secure brackets at both ends where possible.

You can mount the Shadow 8 heads directly to a vertical wall or column of the press if the location meets all mounting requirements, including safety distance.

When mounting brackets on the bolster of the press, choose your location carefully. Make sure the brackets do not prevent dies from being removed from the press.

See Figure 2-6 and Table 2-2, page 2-19, and Figure 2-7, page 2-20, for layout and hole dimensions of the Shadow 8 heads and universal mounting brackets.

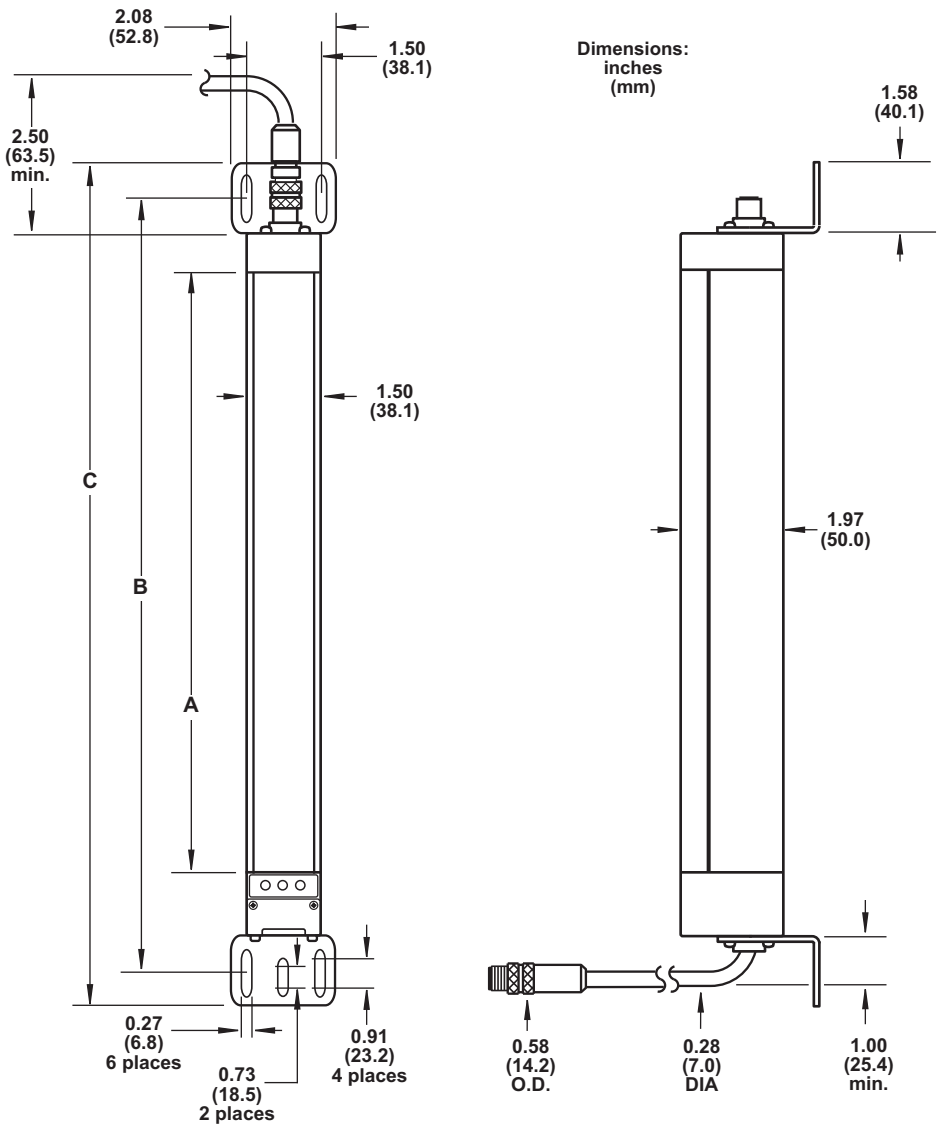

Figure 2-6. Shadow 8 Optic Heads: Mounting Dimensions

Table 2-2. Light Curtain Dimensions in Inches (Millimeters) (see Figure 2-6)

Scanning Height	A	B (Main)	B (Extension)	C (Main)	C (Extension)
9.4 (240)	9.6 (244.6)	13.5 (341.9)	12.7 (323.3)	15.0 (380.6)	14.3 (362.1)
12.6 (320)	12.8 (324.8)	16.6 (422.1)	15.9 (403.5)	18.1 (460.8)	17.4 (442.3)
17.3 (440)	17.5 (443.9)	21.3 (541.2)	20.6 (522.6)	22.8 (579.9)	22.1 (561.4)
23.6 (600)	23.8 (604.1)	27.6 (701.4)	26.9 (682.8)	29.1 (740.1)	28.4 (721.6)
29.9 (760)	30.0 (763.0)	33.9 (860.3)	33.1 (841.7)	35.4 (898.0)	34.7 (880.5)
36.2 (920)	36.3 (922.5)	40.2 (1019.8)	39.5 (1001.2)	41.7 (1058.5)	41.0 (1040.0)
47.2 (1200)	47.4 (1203.8)	51.2 (1301.1)	50.5 (1282.5)	52.8 (1339.8)	52.0 (1321.3)
59.8 (1520)	59.9 (1521.5)	63.7 (1618.8)	63.0 (1600.2)	65.3 (1657.5)	64.5 (1639.0)

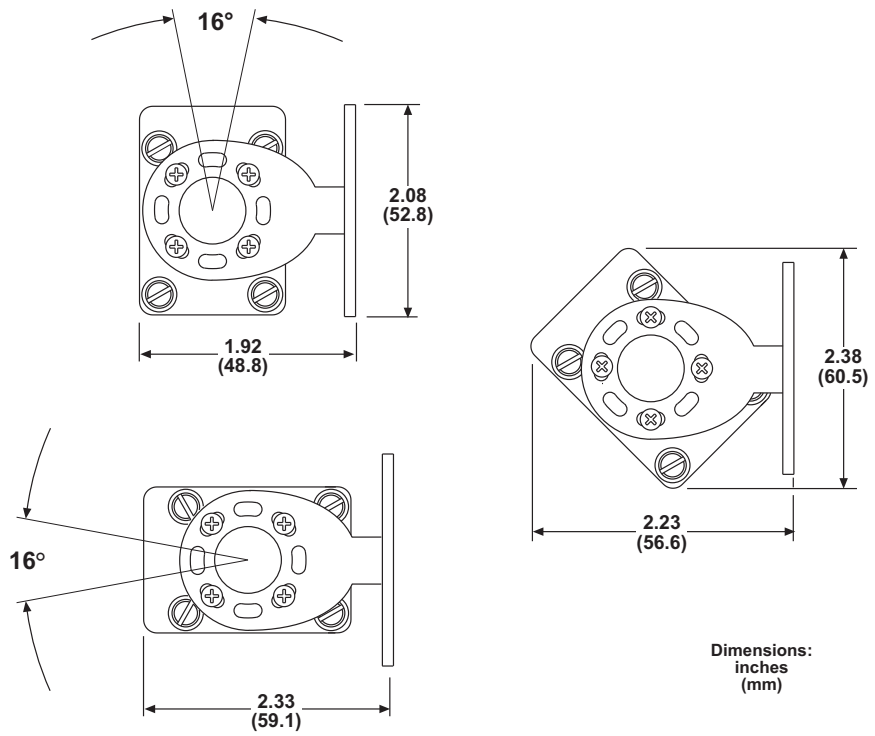

Figure 2-7. Shadow 8 Universal Mounting Brackets: Dimensions and Rotation (Top View)

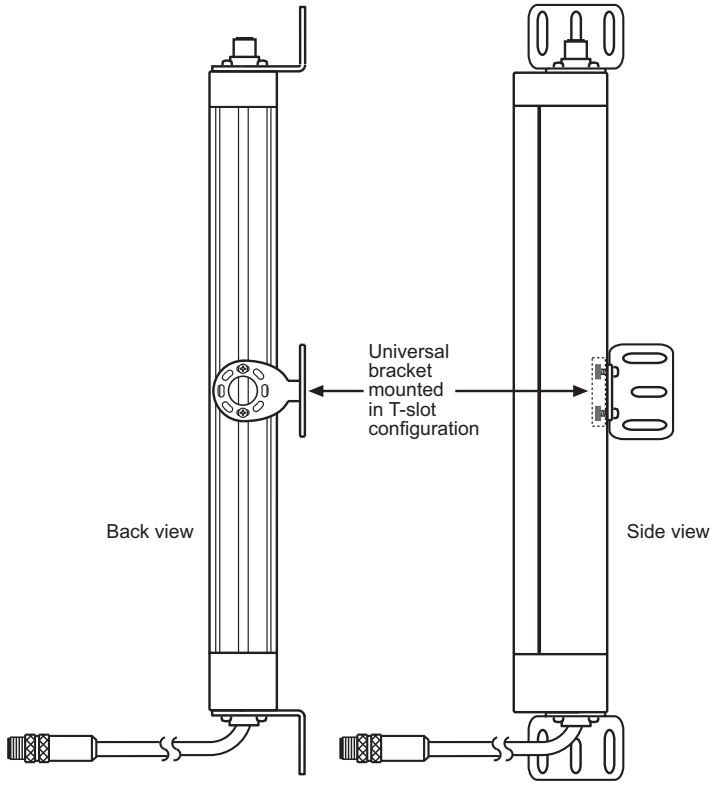

Figure 2-8. Shadow 8 Universal Mounting Brackets: T-Slot Configuration

Aligning Brackets

The design of your brackets must allow adjustment of the Shadow 8 heads once they are mounted. Shadow 8 light curtains may have to be moved slightly up or down or rocked slightly to one side or the other to align them.

Shadow 8 universal mounts can be rotated ±8° to facilitate installation and alignment. If you need to pivot a bracket more than 8°, remove the mounting screws, move the bracket 45° or 90°, and reattach the bracket to the head.

Shadow 8s can be mounted with pigtails pointed up or down as long as both transmitter and receiver are oriented in the same direction. Shadow 8 heads can be mounted at any angle as long as they are in the same plane. Vertical mounting is easiest, however.

When mounting your brackets, you can draw a leveling line, using the center of the bracket holes as the end points (see Figure 2-9). When you mount the Shadow 8 flanges onto the bracket holes, the Shadow 8 light curtains will be aligned or close to being aligned.

Use a plumb or leveling line and square to properly align the brackets. Use the bed of your press (if applicable) or the floor as a leveling reference point. Make sure that the brackets are placed in the same plane.

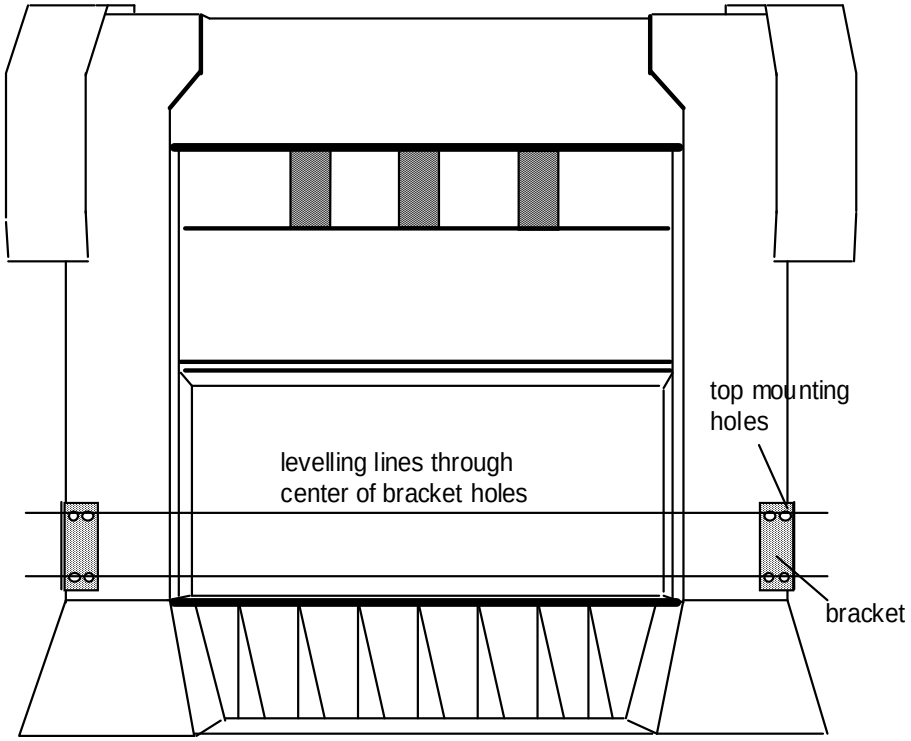

Figure 2-9. Aligning Brackets Using Mounting Holes

Maximum Openings for Side Guards

When mechanical side guards are used in addition to the Shadow 8 light curtains for three sided-guarding, you must ensure that the openings between or around the guards meet OSHA requirements. You must also ensure that the openings in the guard material itself (wire, extruded mesh, rods, etc.) or between the guards and working surface meet OSHA requirements. Table 2-3 shows the maximum dimensions of openings allowed by OSHA as provided in OSHA Table 0-10.

Table 2-3. OSHA Table 0-10

Distance of Opening from Pinch Point (In.)	Maximum Dimension of Opening (In.)
1/2 to 1 1/2	1/4
1 1/2 to 2 1/2	3/8
2 1/2 to 3 1/2	1/2
3 1/2 to 5 1/2	5/8
5 1/2 to 6 1/2	3/4
6 1/2 to 7 1/2	7/8
7 1/2 to 12 1/2	1 1/4
12 1/2 to 15 1/2	1 1/2
15 1/2 to 17 1/2	1 7/8
17 1/2 to 31 1/2	2 1/8

Using Mirrors with Shadow 8

NOTICE

MIRRORS DECREASE SCANNING DISTANCE AND ANGLE OF DIVERGENCE

- Allow for a reduction in scanning range of 10% for each mirror you use. Since Shadow 8 has a default scanning range of up to 65’ minimum (or up to 26’ minimum if option switch SWB 6 is set to ON–see page 2-48), you reduce the scanning range of the unit 6.5’ (or 2.6’) for each mirror you install.
- Allow for a reduction in angle of divergence if you use mirrors. Mirrors greatly reduce the light curtain’s vibration tolerance and make alignment more critical.

Mirrors may be purchased from Wintriss as optional items to use with Shadow 8 for two- or three-sided guarding. Wintriss provides front-reflective mirrors that provide optimal light transmission or reflection. Wintriss does not recommend the use of other mirrors or other reflective surfaces as they may severely reduce vibration tolerance or scanning distance.

A typical setup of Shadow 8 heads and mirrors in a three-sided guarding application is shown in Figure 2-10, page 2-23. The Shadow 8 heads are aimed at the mirrors, and the light beam from the transmitter is reflected by way of the mirrors to the receiver.

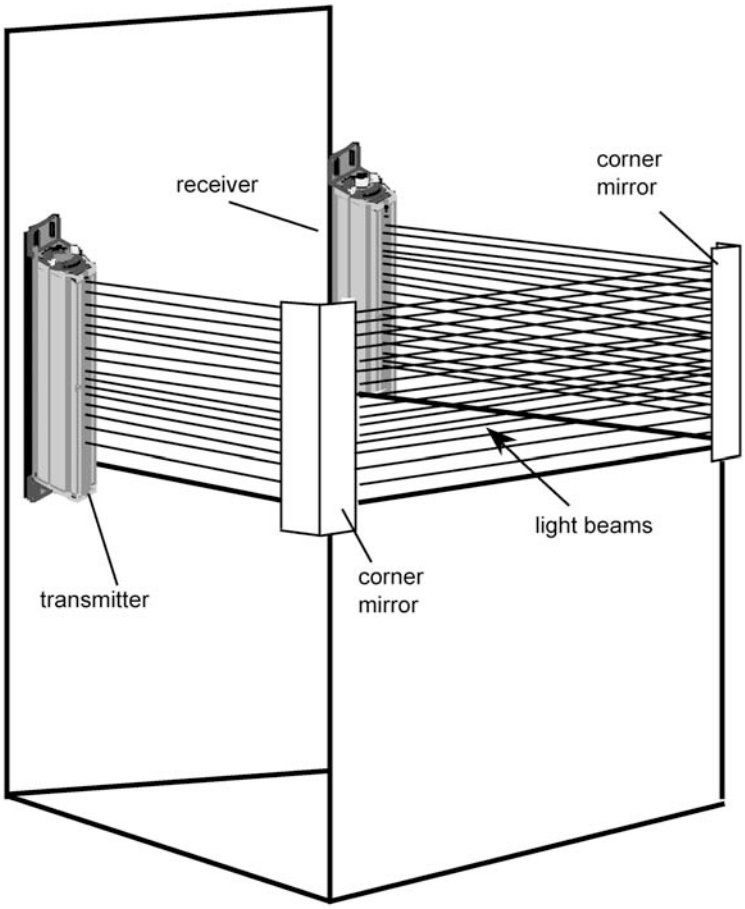

Figure 2-10. Shadow 8 with Mirrors for Three-sided Guarding

The Shadow 8 light curtains and mirrors do not have to be arranged in a rectangle as shown in Figure 2-10. You can adjust the mirrors to reflect light from the Shadow 8 transmitter at other angles than right angles.

Shadow 8 heads must be aligned with mirrors so that each phototransistor in the receiver can detect the light beam reflected by the mirror(s) from the transmitter. Choose mirrors of the correct height for the model heads you are using. See *Aligning and Tightening Down Shadow 8 Heads*, page 2-49 for instructions on aligning transmitter and receiver.

Dimensions of Wintriss mirrors are shown in Figure 2-11 and Table 2-4, page 2-24.

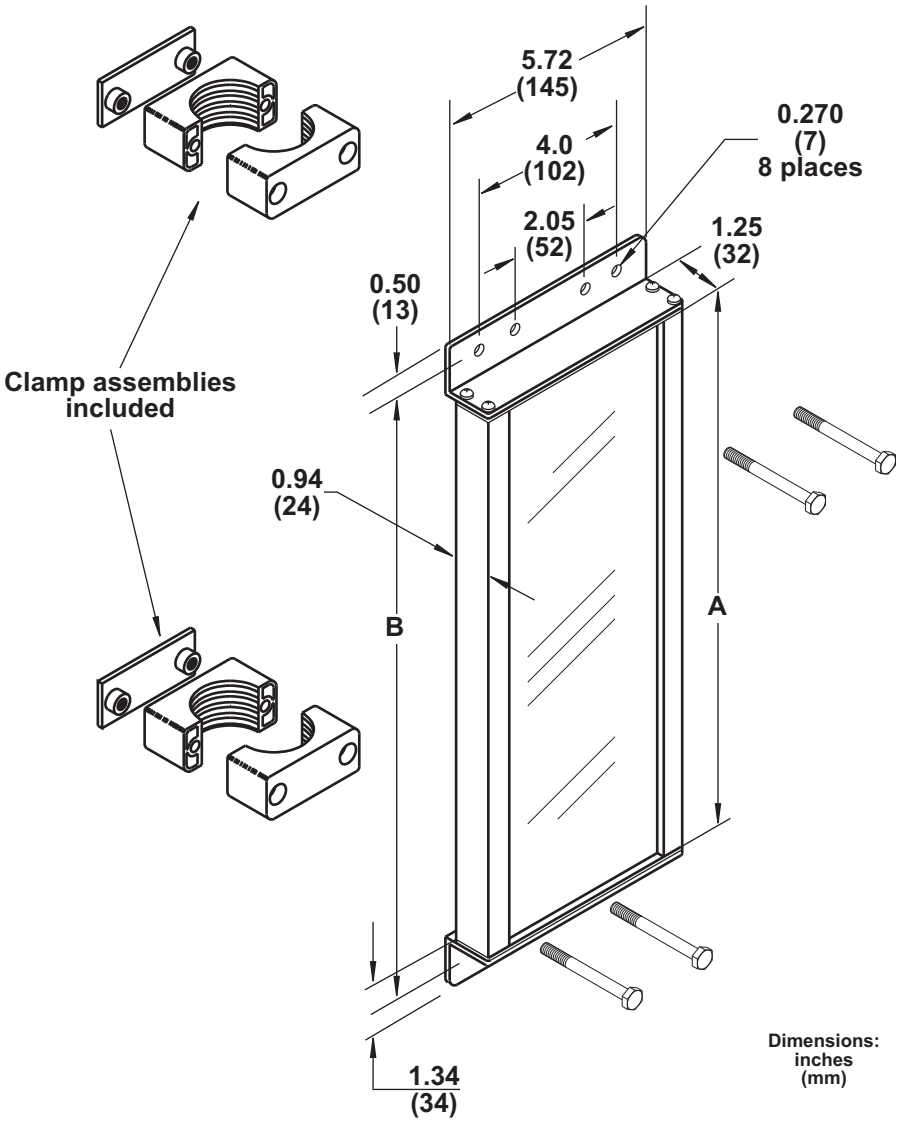

Figure 2-11. Shadow 8 Mirror Dimensions

Table 2-4. Shadow 8 Mirror Dimensions (see Figure 2-11)

Light Curtain Model	A (in./mm)	B (in./mm)
12.8 in. (320 mm)	13.5 (343)	15.18 (386)
17.5 in. (440 mm)	19.5 (495)	21.18 (538)
23.8 in. (600 mm)	25.5 (648)	27.18 (690)
30.0 in. (760 mm)	31.5 (800)	33.18 (843)
36.3 in. (920 mm)	37.5 (953)	39.18 (995)
47.4 in. (1200 mm)	49.5 (1257)	51.18 (1300)
59.9 in. (1520 mm)	61.5 (1562)	63.18 (1605)

Reflective Surface Interference

A reflective surface adjacent to the sensing field can deflect the optical beam and may cause an obstruction in the field not to be detected (see Figure 2-13, below, and Figure 2-14, page 2-26). The reflective surface may be part of the machine, mechanical guard or workpiece. Therefore, a minimum distance (d) must exist between the reflective object and the center line of the Shadow 8 sensing field. The Test Procedure (see *Test Procedure*, page 2-56) must be used to test for this condition.

In Figure 2-12, below, the interruption is clearly detected. The reflective object is outside of the beam angle.

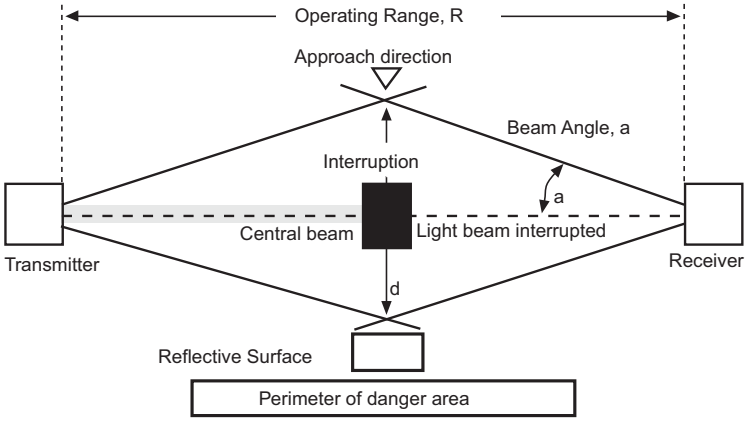

Figure 2-12. Correct Mounting Example with Proper Alignment

In Figure 2-13, below, the interruption is not detected because of the reflection. The reflective object is inside the beam angle.

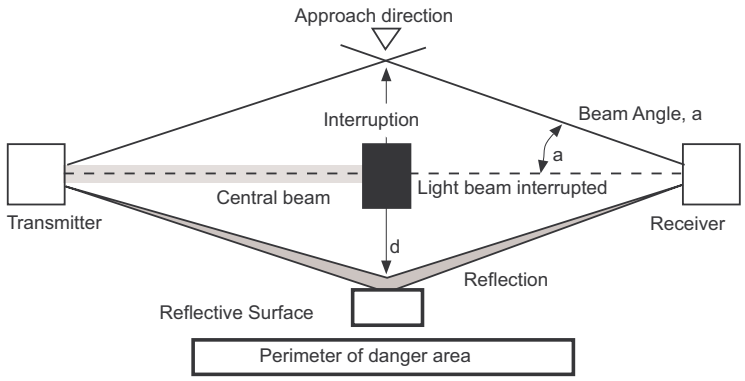

Figure 2-13. Unsafe Mounting, Example 1

In Figure 2-14 (next page) the interruption is not detected because of the reflection. Reflective surface interference may also appear above and below the sensing field.

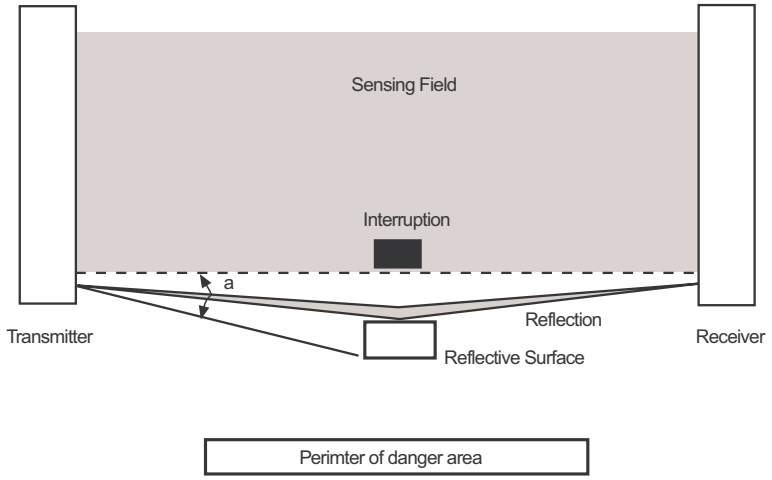

Figure 2-14. Unsafe Mounting, Example 2

Figure 2-15 and Figure 2-16 show the minimum distance from the reflective surface, d, to one side of the beam center line.

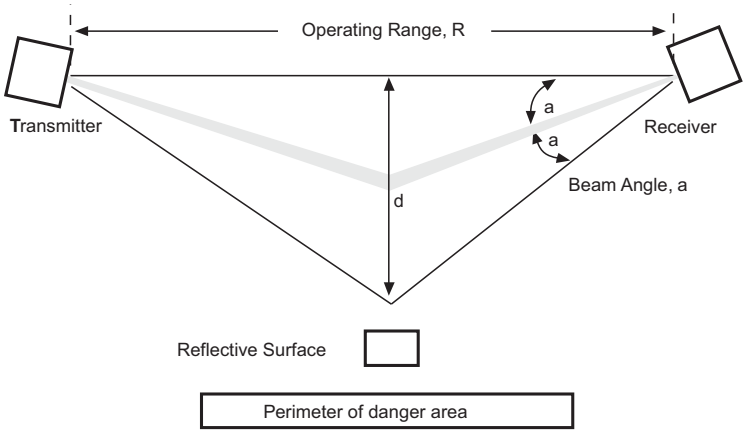

Figure 2-15. Minimum Distance: Worst Case Alignment Example

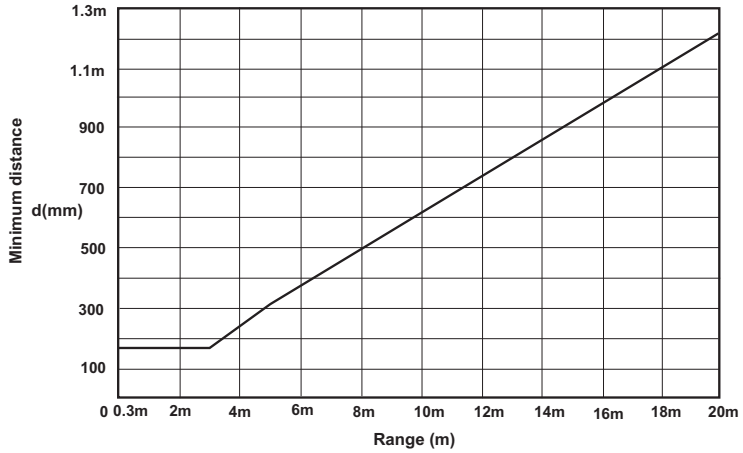

Figure 2-16. Minimum Distance from a Reflective Surface as a Function of Range

Preventing Cross Talk between Two Sets of Shadow 8 Heads

Normally, the phototransistors in the Shadow 8 receiver do not respond to other light sources, accepting only infrared light pulses of a certain duration in proper sequence. However, in cases where two sets of Shadow 8s are located in close proximity to each other, the LEDs from the transmitter of one pair may be detected by the phototransistors in the receiver of the other pair. This is called “cross talk.”

Cross talk may occur when one pair of Shadow 8s is mounted horizontally next to a vertical pair to detect an operator between the vertical set and the pinch point. Cross talk may also occur when guarded machines are close together, the light from the transmitter on one press being detected by the receiver on the other press.

There are several ways to prevent cross talk:

- Insert a barrier of some type, such as a blind, between the two sets of Shadow 8 heads. Make sure that the barrier runs all the way from the transmitter to the receiver.
- Reverse the position of the transmitter and receiver on the second press, as shown in Figure 2-17.
- Set different scan codes for adjacent pairs of light curtains on the option switches on Main Receiver and Transmitter (see *Setting Scan Codes (Receiver Switch 3, Transmitter Switch 1)*, page 2-47).
- Reduce the scanning range to its lower setting (see *Setting Scanning Range (Receiver Switch 6)*, page 2-48).

These solutions can be used singly or in combination.

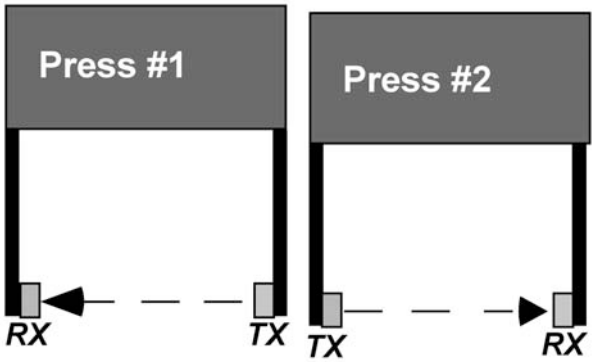

Figure 2-17. Reversing Transmitters (TX) and Receivers (RX) to Prevent Cross Talk

Loosely Mounting Shadow 8 Transmitter and Receiver

CAUTION

AVOID FAULTY SHOCK MOUNT INSTALLATION

Install the shock mounts between the mounting surface and the universal mounting brackets that hold the optic heads in order to protect the heads from damage.

Failure to comply with these instructions could result in property damage.

When you initially install the Shadow 8 optic heads, you should leave the heads loose on their mounting brackets so that you can properly determine required conduit and wiring length. You will align and tighten the heads later (see *Aligning and Tightening Down Shadow 8 Heads*, page 2-49).

Shock mounts (see Figure 2-18) are provided with each pair of Shadow 8 transmitters/ receivers to help protect the heads from damage due to shock or vibration.

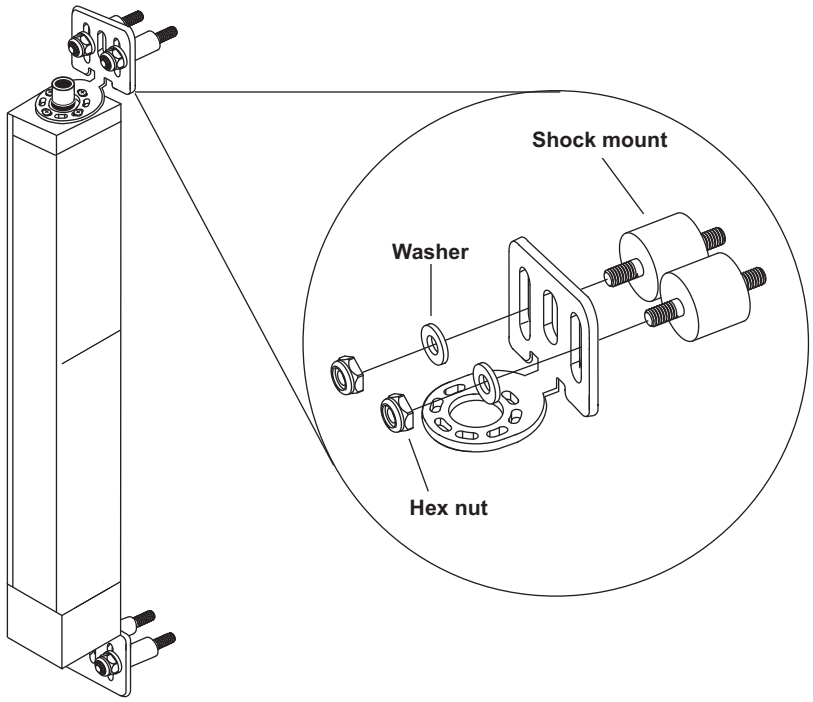

Figure 2-18. Mounting an Optic Head with Shock Mounts

Perform the following steps to loosely mount transmitter and receiver, referring to Figure 2-18 and to Figure 2-6, page 2-19.

1. Locate four mounting holes for each head on either your brackets or on a solid surface (see *Designing and Installing Mounts for Optic Heads*, page 2-15). Shock mount studs come in two sizes: 10-32 for 9.4-in. through 36.2-in. heads, 1/4-20 for 47.2-in. and 59.8-in. heads. For installation onto a solid surface, use a No. 21 drill and a 10-32 tap or a No. 7 drill and a 1/4-20 tap. For through-installation onto a metal bracket, drill clearance holes.

2. Before mounting the optic heads, install four shock mounts for each head. Thread a shock mount into each of the four tapped holes in the mounting surface, or use a washer and nut to secure each shock mount to a metal bracket.
3. Using washers and nuts, loosely mount the optic heads onto the shock mounts as shown in Figure 2-18.

Follow the instructions in the next section to complete the installation. You will align and adjust the heads (see *Aligning and Tightening Down Shadow 8 Heads*, page 2-49) after you mount and wire the control.

Mounting the Optional Control

⚠ DANGER

DO NOT MOUNT CONTROL WHERE IT CAN AFFECT LIGHT CURTAIN OPERATION

Install the light curtain control in a location where access to it will not affect the operation of the light curtain.

Failure to comply with these instructions will result in death or serious injury.

⚠ DANGER

DO NOT INSTALL CONTROL INSIDE THE GUARDED AREA FOR PERIMETER GUARDING

Install the light curtain control outside the guarded area for perimeter guarding applications.

Failure to comply with these instructions will result in death or serious injury.

Choose an appropriate location when mounting the optional control box. The control should be mounted in a location where personnel can easily turn both the Program/Run/Start and Program Off/On key switches and see the warning indicators without interfering with the operation of the light curtains. The control must never be installed inside the protected area in perimeter guarding applications. The enclosure can be mounted to the press, on a free-standing pedestal, on a pendant, or at the entrance of a location used for area guarding.

Once you have selected a mounting location, drill eight holes for mounting, and tap, if necessary. Shock mount studs are 1/4-20. Mount the enclosure using the enclosed shock mounts. Use a No. 7 drill and 1/4-20 tap. Refer to Figure 2-19, page 2-30, for mounting dimensions.

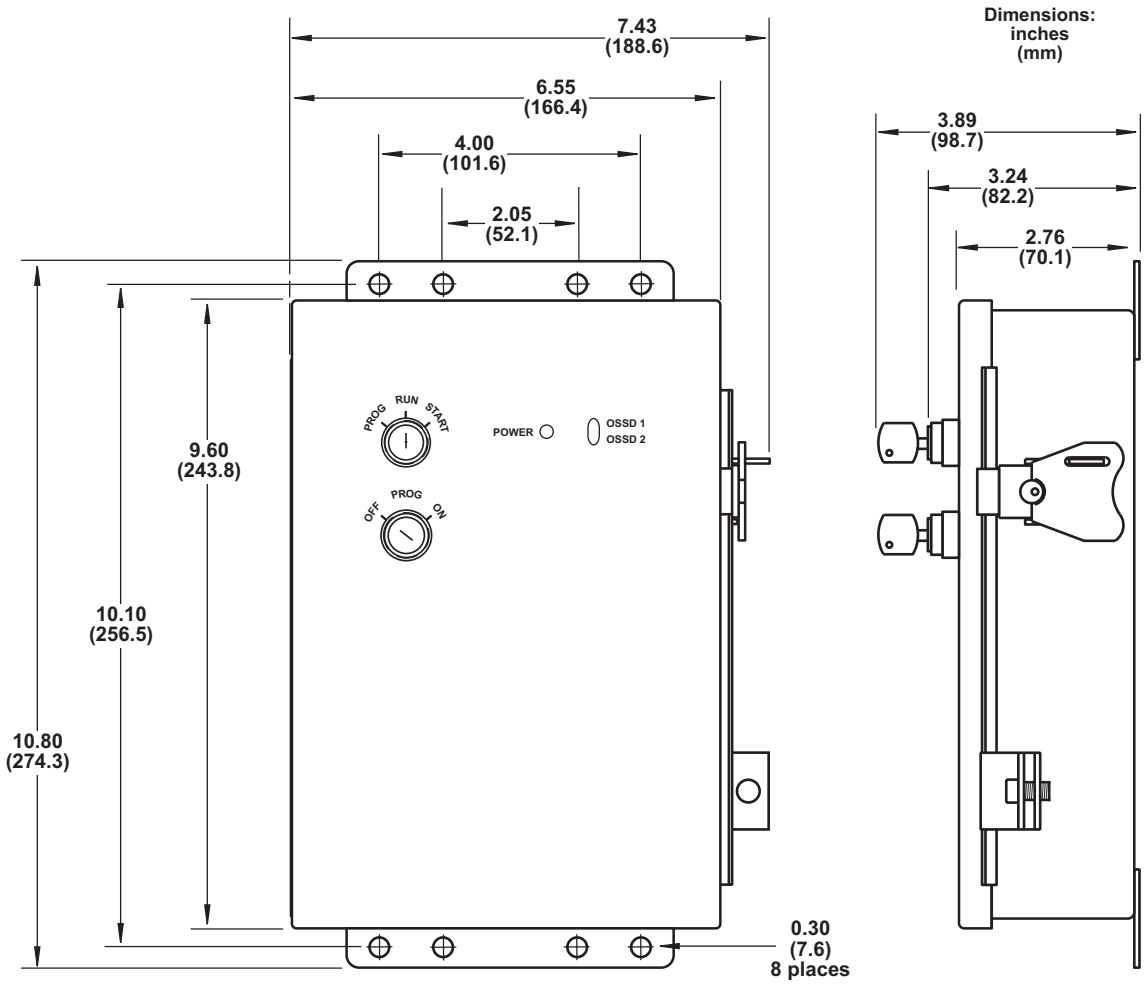

Figure 2-19. Shadow 8 Control Box: Mounting Dimensions

Wiring Main Optic Heads to the Control

⚠ DANGER

DO NOT USE SHADOW LIGHT CURTAINS ON FULL-REVOLUTION POWER PRESSES

- DO NOT use Shadow 8 safety light curtains on full-revolution clutched machinery, which cannot be stopped in mid-stroke.
- Use Shadow 8 safety light curtains only on machinery that can be stopped at any point in the stroke or cycle.

Failure to comply with these instructions will result in death or serious injury.

⚠ DANGER

PREVENT PRESS FROM BEING ABLE TO MOVE AFTER INTRUSION

- Ensure that Shadow 8 is wired to the emergency stop circuitry of the press.
- Ensure that any stop initiated by the light curtain is an immediate stop, one that occurs immediately after the stop signal is sent to the machinery. (If the light curtain is wired by mistake to the top-stop circuitry, the press continues its stroke until it reaches the top of the stroke, even after an intrusion or obstruction is detected.)

Failure to comply with these instructions will result in death or serious injury.

⚠ DANGER

AVOID WIRING STOP CIRCUITS THAT ARE NON-OPERATIVE IN SOME MODES

Wire the light curtain to your press control circuit so the stop signal from the light curtain stops the machine immediately in all modes of operation, including Inch.

Failure to comply with these instructions will result in death or serious injury.

⚠ WARNING

GUARD AGAINST ELECTRIC SHOCK HAZARD

- Ensure that the power source is off before you make any wiring connections.
- Turn off and disconnect power from the Shadow 8 safety light curtain and from the machinery it is connected to, including the machine control and motor, before making any wiring connections.
- Ensure that all procedures are performed by qualified personnel.

Failure to comply with these instructions could result in death or serious injury.

To wire the Main Transmitter and Receiver to the optional Shadow 8 control, perform the following steps, referring to Figure 2-20, page 2-32, and Figure 1 at the back of the manual for wiring connections:

1. Plug the two quick-disconnect cables into the pigtail connectors on receiver and transmitter (the connection is keyed), and twist the locknut until the connection is tight. The receiver cable has a red terminal overmold, the transmitter cable a black overmold.

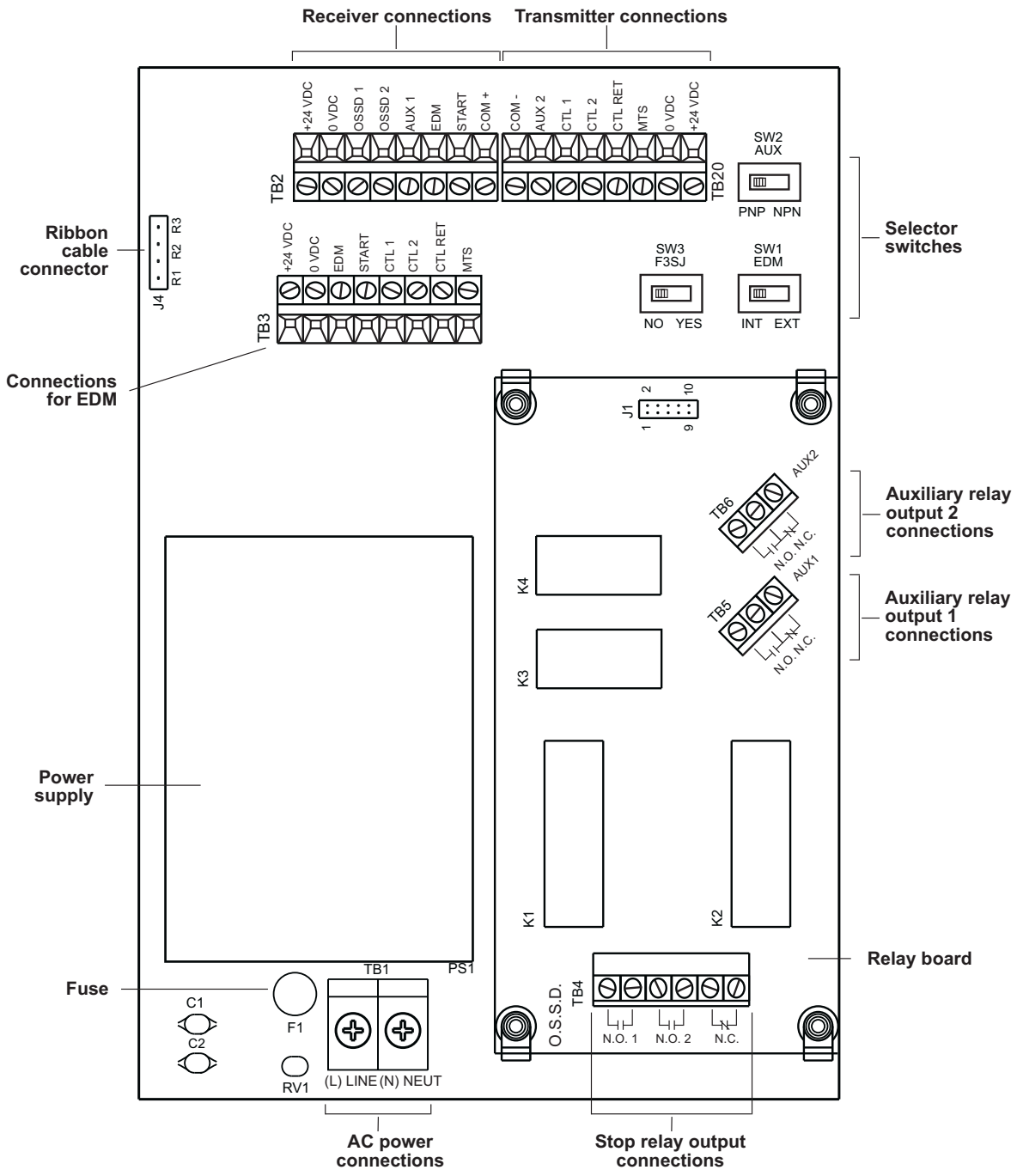

Figure 2-20. Shadow 8 Main Board: Location of Important Components

NOTICE

When joining cables with quick-disconnect fittings, be sure to make the connections between the two cables as tight as you can make them by hand. Do not use tools such as wrenches or pliers to tighten quick-disconnects.

2. Run the cables from the receiver and transmitter to the knockouts in the top of the control. The receiver cable will be inserted into the top center knockout, the transmitter cable into the top right knockout. If you want to install cabling in liquid-tight conduit, refer to Figure A at the end of the manual for a drawing and parts list.
3. Open the control by pulling up on and turning the hinge to unlock the clasp.
4. Locate terminal blocks TB2 (receiver) and TB20 (transmitter) on the Shadow 8 Main board (see Figure 2-20).
5. Measure the wires to fit and cut the wires as necessary. Allow 4 1/2 in. at the end of the cable for connections at the control.
6. Thread the receiver cable through the hole in the top of the plastic gland nut (see Figure 2-21), then through the hole in the tapered end of the threaded coupling. Slide both components well down the cable so they are out of the way.

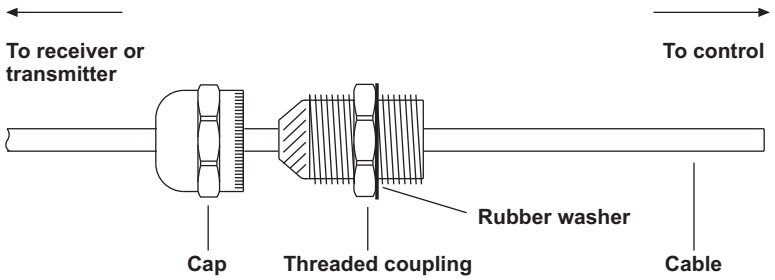

Figure 2-21. Cable Being Threaded through Top of Gland Nut and Threaded Coupling

> **NOTICE**
> When removing insulation, be careful not to cut into the conductors.

7. Remove the first 4 1/2 in. of black PVC insulation from the conductors, using an Exacto knife. First, make a shallow incision around the circumference of the cable, then bend the insulation back and forth at the incision point and pull the 4 1/2 in. length of insulation free.

> **NOTICE**
> When tightening the gland nut cap and coupling, make sure to turn cap and coupling in opposite directions at the same time.

8. Slide the gland nut cap and threaded coupling down the cable (i.e., toward the control) until the end of the coupling is flush with the point at which you cut the cable. Thread the cap onto the coupling, and tighten the two components by hand, securing the cable as you do so.
9. Tighten the cap onto the coupling, using a 1 1/16 in. (27 mm) wrench.
10. Remove 3/16 to 1/4 in. of insulation from the ends of each conductor wire, using a wire stripper.

11. Insert the gland nut coupling through the top center knockout of the control box.
12. From inside the control, thread the 1 1/16 in. locknut through the bundle of connectors until it contacts the coupling, then tighten the nut onto the threads with your hands.
13. Tighten the nut securely with a 1 1/16 in. (27 mm) wrench.
14. Connect receiver wires to terminal block TB2 on the Shadow 8 Main board, as shown in Table 2-5, below, and Figure 1 at the end of the manual.

Table 2-5. Main Receiver Wiring Connections

Wire Color	Signal Label (TB2)
Brown	+24 Vdc
Blue	0 Vdc
Black	OSSD 1
White	OSSD 2
Pink	Aux 1
Red	EDM
Yellow	Start
Green	Ground stud *

* Terminate green wire to ground stud inside enclosure near cable entry point.

NOTICE

To connect a wire, find the correct terminal and loosen the screw over it by turning it counterclockwise. Insert bare wire into the terminal 90% of the way. Tighten the screw. The metal tooth inside the terminal will clamp down on the bare wire for a tight connection. Make sure that the metal tooth is clamped down on the bare part of the wire, not on the insulation.

15. Repeat steps 6-13 for the transmitter cable.
16. Connect transmitter wires to terminal block TB20 on the Shadow 8 Main board, as shown in Table 2-6 and Figure 1 at the end of the manual.

Table 2-6. Main Transmitter Wiring Connections

Wire Color	Signal Label (TB20)
Black	Ctl Ret
White	MTS/Test
Blue	0 Vdc
Brown	+24 Vdc
Green	Ground stud *

* Terminate green wire to ground stud inside enclosure near cable entry point.

17. When you have finished, double-check all connections.

> **NOTICE**
>
> Make sure to install end caps on Main Receiver and Transmitter connectors if you are not adding Extension heads. End caps protect connectors from oil and other contaminants.

18. If you are using the Main Receiver and Main Transmitter as a standalone light curtain, make sure the end cap is securely fastened to the threaded connector on the other end of the head to protect the light curtain from oil and other contaminants.

Connecting Extension Heads

Once you have wired the Main Receiver and Transmitter to the Shadow 8 control, you can connect up to three pairs of Extension light curtains to the Main heads. (Total protection length cannot exceed 202 in. For either transmitters or receivers, length of heads and interconnect cabling cannot exceed 110 ft. See Table 1-1, page 1-13.) Extensions can be connected to the Main heads or to another pair of Extension heads. Each pair of Extension heads can be of a different length from that of the Main pair or of other Extensions.

> **NOTICE**
>
> Make sure to install end caps on the connectors of the last Extension Receiver and Transmitter in your light curtain setup. End caps protect the connectors from contaminants.

On the last pair of Extensions, you should screw end caps onto the threaded connectors to protect them from oil and other contaminants.

When the distance between connectors on the Extension units and on the heads to which they are being attached is less than 7 in., you can use the 7-in. pigtails on the Extension heads to connect the two pairs of light curtains. For distances greater than 7 in., interconnect cables of various lengths (see Table 1-1) can be attached to the pigtails to complete the connection.

> **NOTICE**
>
> Use no more than one interconnect cable to wire one receiver or transmitter to another.

If you want to install extension cabling in liquid-tight conduit, refer to Figure A at the end of the manual for a drawing and parts list.

> **⚠ DANGER**
>
> You must cycle power to the light curtains after installing extensions; otherwise, Shadow 8 will not recognize the new heads.
>
> **Failure to comply with these instructions will result in death or serious injury.**

It is easiest to connect extensions when power to the light curtains is off. Shadow 8 will only recognize the segments you have added when power to the press has been removed, then reapplied.

Connecting Extension Heads Using Pigtails Only

To connect a pair of Extension heads to the Main heads or to another pair of Extensions when the distance between the two receivers and the two transmitters is less than 7 in., do the following:

1. With power to the press turned off, unscrew the end caps from the threaded connectors on the receiver and transmitter to which you are connecting the Extension units.
2. Plug the pigtails on the Extension heads into the now capless threaded connectors on the other receiver and transmitter, and screw them down tightly.

> **NOTICE**
>
> Make sure to install end caps on the connectors of the last Extension Receiver and Transmitter in your light curtain setup to protect them from oil and other contaminants.

3. Plug the end caps you removed in step 1 into the threaded connectors on the Extension units (the connectors are keyed), and screw them down securely.
4. Apply power to the light curtains. If your Shadow 8 is operating in Start/Restart Interlock mode, turn the Program/Run/Start key switch to “START” to reset the unit.

Connecting Extension Heads Using Interconnect Cables

To connect a pair of Extension heads to the Main heads or to another pair of Extensions when the distance between the two receivers and the two transmitters is greater than 7 in., do the following:

1. With power to the press turned off, unscrew the end caps from the threaded connectors on the receiver and transmitter to which you are connecting the Extension units.

> **NOTICE**
>
> Use no more than one interconnect cable to wire one receiver or transmitter to another.

2. Plug the pigtails on the Extension heads into the female connectors on the interconnect cables (the connectors are keyed), and screw the two connectors together.

> **NOTICE**
>
> When joining cables with quick-disconnect fittings, be sure to make the connections between the two cables as tight as you can make them by hand. Do not use tools such as wrenches or pliers to tighten quick-disconnects.

3. Plug the male connectors on the interconnect cables into the threaded connectors from which you removed the end caps in step 1 (the connectors are keyed), and screw them down tightly.

> **NOTICE**
>
> Make sure to install end caps on the connectors of the last Extension Receiver and Transmitter in your light curtain setup to protect them from oil and other contaminants.

4. Plug the end caps you removed in step 1 into the threaded connectors on the Extension units (the connectors are keyed), and screw them down securely.
5. Apply power to the light curtains. If your Shadow 8 is operating in Start/Restart Interlock mode, turn the Program/Run/Start key switch to “START” to reset the unit.

Connecting AC Wiring to the Optional Control

> **⚠ WARNING**
>
> **GUARD AGAINST ELECTRIC SHOCK HAZARD**
>
> - Ensure that the power source is off before you make any wiring connections.
> - Turn off and disconnect power from the Shadow 8 safety light curtain and from the machinery it is connected to, including the machine control and motor, before making any wiring connections.
> - Ensure that all procedures are performed by qualified personnel.
> - Complete all installation procedures before connecting wires to the AC power source.
>
> **Failure to comply with these instructions could result in death or serious injury.**

The control is wired to a 115-230 Vac @ 30 VA power source. In bringing AC wiring to the control, follow these guidelines:

- All wires can be run through flexible liquid-tight conduit as long as all circuits are the same voltage. If your emergency stop circuits are low voltage circuits (such as 24 Vdc), run two conduits–for instance, one for 115 Vac wires and one for 24 Vdc wires.
- Bring the wiring connections for AC power to a convenient point so that you can tie them to the appropriate connector. No. 16 wire is recommended for these circuits; use No. 14 if local codes require it.

Perform the following steps to connect AC wiring to the Shadow 8 control:

1. Open the door of the control and locate terminal block TB1 on the Shadow 8 Main board in the lower left corner of the enclosure (see Figure 2-22, page 2-38). This is the connector for AC power.

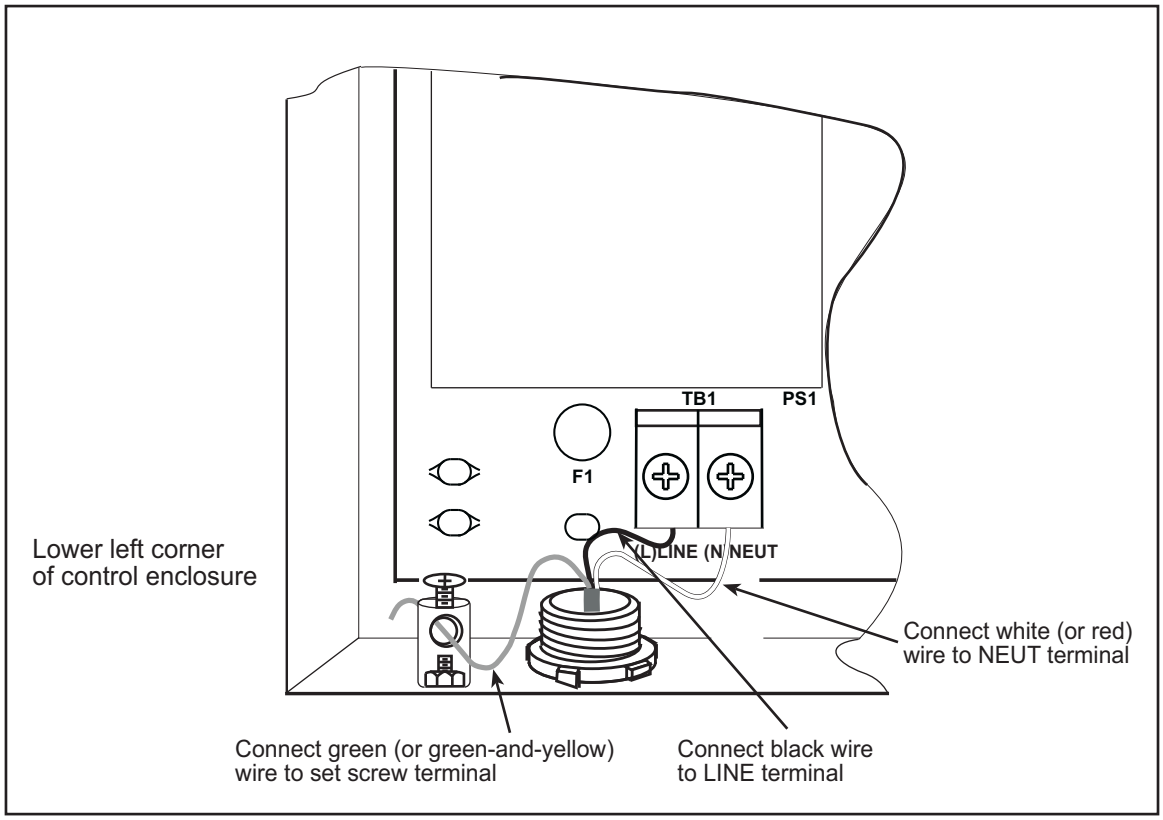

Figure 2-22. Shadow 8 AC Wiring Connections

2. Determine how you will bring wiring from your 115 Vac power source (or 230 Vac source, if applicable) to the appropriate knockout at the bottom of the unit. These wires should be connected directly to the press control transformer. For 115 Vac, you need three wires—high (black), neutral (white) and ground (green). For 230 Vac, high and neutral wires are black and red, the ground wire green or green-and-yellow.

3. Run the power wires to the control box. If your stop circuits are 115 Vac, the AC wiring and stop circuits will be run through the same flexible, liquid-tight conduit and will enter the enclosure ideally through the bottom middle knockout. If the stop circuits are 24 Vdc, then 115-230 Vac wiring will enter through the bottom left knockout and the 24 Vdc wires through the bottom right knockout. To maintain the control box's IP65 rating, you must use conduit of the same rating and make proper connections to the control.

4. Remove the knockout(s) you plan to use for your AC wiring and stop circuits. Left and center knockouts are combo units (0.875 in. (22.2 mm) ID, 1.13 in. (28.7 mm) OD); right knockout is 0.875 in. (22.2 mm) diameter. You remove the inner disk in the combo knockouts from inside the control box, the outer diameter from outside the control box. The right knockout is removed from outside the box. To remove a knockout, tap with a hammer and screwdriver around the circumference of the disk. When removing the inner disk of a combo knockout, be sure the control box is well-supported.

5. Connect the black wire to the "L" terminal on TB1, the white (or red) wire to the "N" terminal, as shown in Figure 2-22 and in Figure 2 at the back of the manual.

6. Connect the green (or green-and-yellow) electric service ground wire to the set screw terminal on the bottom of the enclosure, as shown in Figure 2-22.
7. Leave a service loop at the control to allow for later adjustment of the conduit. Cut the wires as necessary.

⚠ WARNING

GUARD AGAINST ELECTRIC SHOCK HAZARD

Do not connect wires to AC power source until you are done with all other installation procedures.

Failure to comply with these instructions could result in death or serious injury.

Connecting Stop Circuits to the Control

⚠ DANGER

DO NOT USE SHADOW LIGHT CURTAINS ON FULL-REVOLUTION POWER PRESSES

- DO NOT use Shadow 8 safety light curtains on full-revolution clutched machinery, which cannot be stopped in mid-stroke.
- Use Shadow 8 safety light curtains only on machinery that can be stopped at any point in the stroke or cycle.

Failure to comply with these instructions will result in death or serious injury.

⚠ DANGER

PREVENT PRESS FROM BEING ABLE TO MOVE AFTER INTRUSION

- Ensure that Shadow 8 is wired to the emergency stop circuitry of the press.
- Ensure that any stop initiated by the light curtain is an immediate stop, one that occurs immediately after the stop signal is sent to the machinery. If the light curtain is not correctly wired in this way, the press may continue its stroke after an intrusion is detected.

Failure to comply with these instructions will result in death or serious injury.

⚠ DANGER

AVOID WIRING STOP CIRCUITS THAT ARE NON-OPERATIVE IN SOME MODES

Wire the light curtain in series with your press control circuit so the stop signal from the light curtain stops the machine immediately in all modes of operation, including Inch.

Failure to comply with these instructions will result in death or serious injury.

⚠ WARNING

GUARD AGAINST ELECTRIC SHOCK HAZARD

- Ensure that the power source is off before you make any wiring connections.
- Turn off and disconnect power from the Shadow 8 safety light curtain and from the machinery it is connected to, including the machine control and motor, before making any wiring connections.
- Ensure that all procedures are performed by qualified personnel.

Failure to comply with these instructions could result in death or serious injury.

Wiring the control into your press's emergency stop or equivalent circuitry ensures that whenever an obstruction or intrusion is detected, the press will stop as quickly as its clutch/brake system (or other system) will permit.

Follow these guidelines when making connections:

- Bring the wiring connections for the emergency stop circuits to a convenient point so that you can tie them to the appropriate connector. No. 16 wire is recommended for these circuits. No. 14 should be used if local codes require it.
- Determine how you will connect the wires from the control to your press control emergency stop circuit. Refer to Figures 2, 3, and 4 at the end of this manual and your press control manual or other electrical prints. You need two wires for the emergency stop circuit.
- If your stop circuits are 115 Vac, the AC wiring and stop circuits will enter the control in the same conduit through the bottom middle knockout (see *Connecting AC Wiring to the Optional Control*, page 2-37). If the stop circuits are 24 Vdc, then 115-230 Vac wiring goes through the bottom left knockout, 24 Vdc wiring through the bottom right knockout.

Wiring Shadow 8 in a Single Normally Open (N/O) Emergency Stop Circuit

If your machine has only a single, Normally Open (N/O) emergency stop circuit, connect the Shadow 8 safety relays in series with the machine's emergency stop circuit. Perform the following steps:

1. Locate terminal block TB4 on the Shadow 8 Main board (see Figure 2-20, page 2-32).
2. Connect pins #1 and #4 on TB4 in series with the stop circuits on the press, and place a jumper between pins #2 and #3, as shown in Figure 2-23, page 2-41 and in Figure 2 at the back of the manual.
3. When you have finished wiring the relays, remember to leave a service loop at the control to allow for later adjustment of the conduit. Cut the wires as necessary.

When wiring Shadow 8 into the press circuit, you should ensure that the light curtain is active in all modes of operation. This includes Inch, Single-stroke, and Continuous. Following this practice will provide safety for setup personnel as well as the operator. In some cases, having Shadow 8 active in all modes may even eliminate the need for lockout during a die change. See OSHA 1910.147 "Lockout/Tagout" for details.

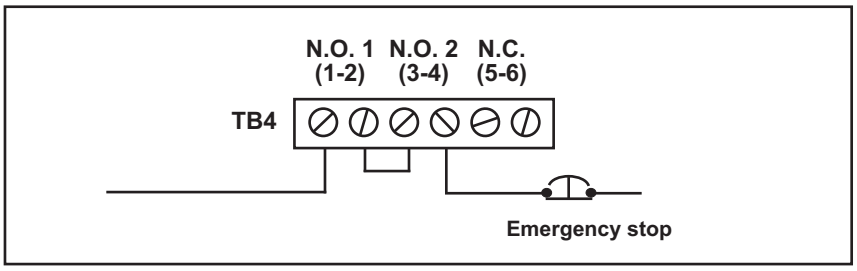

Figure 2-23. Relays Wired to Emergency Stop Circuit, N/O Configuration

Wiring Shadow 8 to EDM Monitor Inputs

⚠ DANGER

ENSURE THAT EDM INSTALLATION IS SUITABLE FOR SAFETY USE

- Install EDM relays in pairs as instructed in this manual (see figures 3 and 4 at end of manual).
- Use only relays with forced guided type contacts for EDM monitoring.
- Ensure that the response time of the EDM circuitry is 300 mS or less.
- Use only the safety outputs for personnel protection.

Failure to comply with these instructions will result in death or serious injury.

External Device Monitoring (EDM), also called Machine Primary Control Element (MPCE) monitoring, is an important safety function. EDM monitors the Shadow 8 interface to the guarded machine, checking to make sure that the interfacing relays are responding correctly to the light curtain and that there is no inconsistency between the state of relays and that of the Shadow 8 safety outputs.

Connections for EDM monitoring are made at the terminals labelled “EDM” and “0 Vdc” on terminal block TB3 on the Main board in the optional Shadow 8 control box (see Figure 2-20, page 2-32). To enable EDM monitoring, you must set switches SWA 2 and SWB 2 on the Main Receiver to “ON” (see *Enabling External Device Monitoring (EDM) (Receiver Switch 2)*, page 2-47) and set switch SW1 EDM on the Main board in the control as follows:

- If the optional control is wired directly in series with the machine’s E-stop circuit without any external relays, set SW1 EDM to “INT” (see figure 2 at the back of the manual)
- If the optional control is wired to external relays, set SW1 EDM to “EXT” (see figures 3 and 4 at the back of the manual)
- If the optional control is wired to a Wintriss Clutch/Brake Control (see *Wiring Shadow 8 Optional Control to a Wintriss Clutch/Brake Control*, page 2-43), set SW1 EDM to “INT” (see figures 5 through 9 at the back of the manual).

When Shadow 8 heads are wired directly to a Wintriss Clutch/Brake Control (i.e., there is no optional control box), the EDM function must be disabled by setting SWA 2 and SWB 2 on the Main Receiver to “OFF” (see figures 11 through 13 at the back of the manual).

In order for the EDM function to monitor the performance of your relays, you must connect the Shadow 8 stop circuits to the interfacing relays (see figures 3 and 4 at the back of the manual) instead of connecting them in series with the machine's immediate stop circuit or with control reliable safety relay modules.

NOTICE

INSTALL SUPPRESSORS IN EDM CIRCUITS

Make sure to install suppressors, as shown in figures 3 and 4 at the end of the manual, when you wire your EDM circuits. Unsuppressed EDM circuits may generate electrical noise, which may cause electronic components not to function properly. Two suppressors are provided in the Shadow 8 Test Kit.

When EDM inputs are wired and enabled, Shadow 8 regularly performs the following checks:

- Whenever Shadow 8 powers up, it looks for an EDM "closed" condition and, if this is found, enters a state consistent with the selected operating mode.
- Whenever Shadow 8 activates its safety outputs, it monitors the EDM for a "closed"-to-"open" transition. This transition must occur within 300 mS or Shadow 8 considers the EDM faulted and enters an Alarm state.
- Whenever Shadow 8 enters a Curtains Obstructed state, it checks whether the EDM input closes within 300 mS of the switching of the safety output. If it does not, Shadow 8 enters an Alarm state.
- If the EDM connections are incorrectly wired, Shadow 8 enters an Alarm state.

Wiring Shadow 8 Optional Control Box to a PLC

⚠ DANGER

AVOID INCORRECT WIRING TO A PLC

- Ensure that the light curtain control is properly wired to your PLC.
- Follow the guidelines in ANSI standard B11.1. The guidelines below serve as a reminder of the importance of connecting your light curtain correctly when using a PLC. Do not wire the outputs in series when connecting Shadow 8 to a PLC.
- Be aware that the details of wiring and programming the PLC are solely your responsibility, and not Wintriss's.
- Use a single safety PLC or multiple non-safety PLCs.

Failure to comply with these instructions will result in death or serious injury.

When wiring the optional Shadow 8 control to a Programmable Logic Controller (PLC) or other type of microprocessor-based control, two (or more) independent logic systems should be used to control the press's stop circuit. Wintriss does not provide specific step-by-step instructions for connecting Shadow 8s to PLCs. This is because of the variety of PLCs and the various programming techniques used. Only general guidelines are supplied in this section. Refer to figures 3 and 4 at the end of the manual for suggested wiring.

We recommend you carefully study the ANSI guidelines in Appendix D of the ANSI B11.1 standards before connecting Shadow 8 to a PLC. Appendix C of the standards, "Some Considerations for Design of Microprocessor-Based Clutch/Brake Controls," gives detailed guidelines for using PLCs to control the clutch and brake on metal-stamping presses.

To ensure maximum safety, you must wire and program the PLC so it can detect an internal component failure and immediately stop the press. Two of the three outputs from Shadow 8's control relays, labelled "N.O. 1," "N.O. 2," and "N.C." (see Figure 2-23), must be connected separately to a PLC.

Next, you must create a program that will check independently each input signal from the Shadow 8 relays. The program should stop the press immediately if the input signals ever differ. That way, a component failure within the PLC will be immediately detected. Also, with Shadow 8 relays wired to the PLC separately, if one of Shadow 8's control relay contacts were to weld shut, preventing the stop signal to the PLC, the other relay contact would still open to send the stop signal.

If you do not connect the control to the PLC properly, the PLC will not be able to read the input signals correctly when a component in the PLC fails. Even though Shadow 8 signals a stop, the PLC will not stop the press.

If the control is connected to a PLC instead of directly to the machinery, then the PLC must be able to transfer Shadow 8's control reliability capability to the press stop circuit. If this capability is overridden or if the PLC cannot detect a failure of its own components, much of Shadow 8's protection features are lost even though Shadow 8 is working properly. This is why it is essential that you do not override Shadow 8's control reliability features when using Shadow 8 with a PLC.

Wiring Shadow 8 Optional Control to a Wintriss Clutch/Brake Control

If you are connecting a Shadow 8 optional control to a Wintriss Clutch/Brake Control (WPC), refer to the following figures at the back of the manual for the appropriate wiring diagram for your specific WPC product:

- WPC 2000 – Figure 5
- WPC 1000, Old Style – Figure 6
- WPC 1000, New Style – Figure 7
- WPC II – Figure 8
- WPC I – Figure 9

If you are connecting Shadow 8 optic heads directly to a WPC 2000 or "new-style" WPC 1000, refer to Appendix A for detailed wiring instructions and to figures 11 (WPC 2000) and 12 (WPC 1000 "new-style") at the back of the manual. If you want to connect Shadow 8 optic heads to an "old-style" WPC 1000, refer to Figure 13 for wiring schematics.

Wiring Auxiliary Output(s)

⚠ DANGER

DO NOT USE NON-SAFETY OUTPUTS FOR SAFETY FUNCTIONS

Use the auxiliary outputs for non-safety functions only. The auxiliary outputs cannot protect personnel from a moving hazard.

Failure to comply with these instructions will result in death or serious injury.

Shadow 8 provides two auxiliary outputs that can be used to illuminate a warning beacon on the press during a fault condition or provide a status input to a PLC. You cannot use the auxiliary outputs for safety functions.

Wiring for Auxiliary Output 1 is connected to pins 1 and 2 on terminal block TB5 on the Shadow 8 Main board for N.O. output or to terminals 2 and 3 for N.C. output (see Figure 2-20, page 2-32 and Figure 10 at the back of the manual). The switch labelled “SW2 AUX” on the Main board must be set to the “PNP” position. Auxiliary Output 1 turns “on” when the safety outputs are “on” (Follow Mode).

If you want to use the second auxiliary output, wire a jumper between the “Aux 1” terminal on TB2 on the Shadow 8 Main board and the “Aux 2” terminal on TB20, then connect Auxiliary Output 2 wiring to TB6, making connections to terminals 1 and 2 for N.O. output or to terminals 2 and 3 for N.C. output. With these wiring connections, Auxiliary Output 2 mimics Auxiliary Output 1.

Setting Option Switches

CAUTION

OPTION SWITCH ACCESS DOOR MUST BE SCREWED SHUT DURING MACHINE OPERATION

Make sure that option switch access doors on both Main Receiver and Transmitter are screwed shut during operation of the guarded machine. Failure to secure access doors during machine operation can result in oil penetration of the optic heads and will void the light curtain warranty.

Failure to comply with these instructions may result in property damage.

CAUTION

USE SCREWDRIVER OF CORRECT SIZE TO SCREW DOWN OPTION SWITCH ACCESS DOORS

Use a Phillips screwdriver of the correct size to screw down the option switch access doors. Use of too small or too large a screwdriver may damage the screw heads.

Failure to comply with these instructions may result in property damage.

CAUTION

USE SLENDER BLUNT TOOL TO SET OPTION SWITCHES

When setting the option switches to the OFF or ON position, use a tool that is both slender enough to engage an individual switch yet blunt enough not to damage the switch.

Failure to comply with these instructions may result in property damage.

The DIP switches on Main Receiver and Transmitter (shown in their factory default positions in Figure 2-24, page 2-46) allow you to set the following options:

- Operating Mode: Automatic Start or Start/Restart Interlock
- External Device Monitoring (EDM): Disable/Enable
- Scan Code: A or B
- Floating Blanking: Disable/Enable
- Programmable Fixed Blanking: Disable/Enable
- Scanning Range: Short/Long

Receiver switches are organized in two blocks, SWA (upper block) and SWB (lower block). With the exception of switch 6, both SWA and SWB switches must be set to the same position (i.e., OFF or ON) for each option. Otherwise, Shadow 8 generates a “23” fault code on the IBIs on the Main Receiver (see page 4-2).

To set the option switches, loosen the retainer screws on the access doors just beneath the LEDs on Main Receiver and Transmitter, and swing the doors down on their hinges. (Access doors are located above LEDs and swing up if mounting orientation of the heads is reversed.) Move switches to the desired positions, using a slender tool with a blunt tip. When you are finished making settings, swing the doors back to their original positions and screw them down.

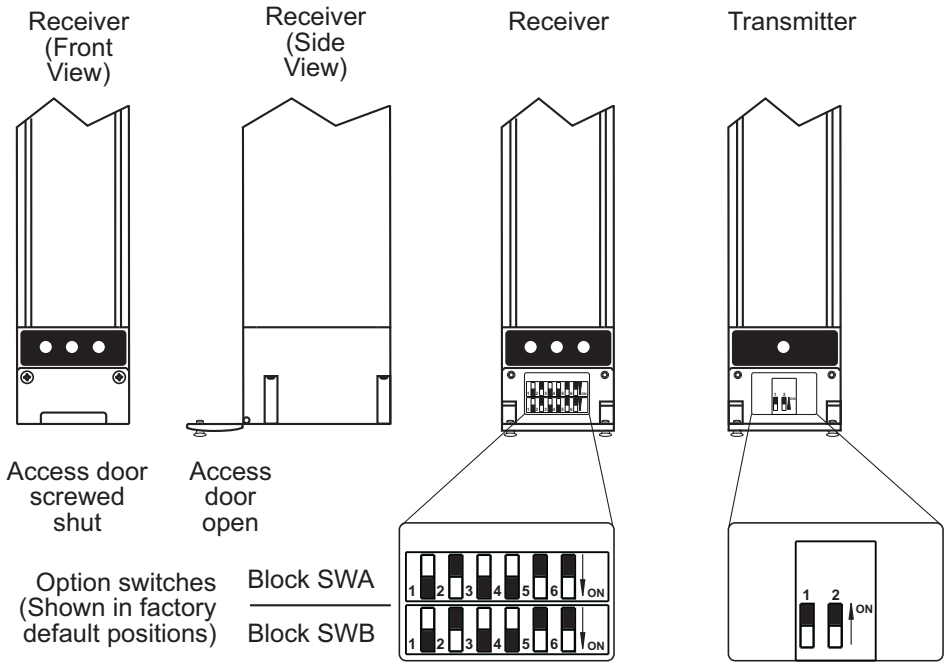

Figure 2-24. Shadow 8 Option Switches (Located in Main Receiver and Transmitter)

Setting Operating Mode (Receiver Switch 1)

Shadow 8 can be set to operate in either Automatic Start (Default) or Start/Restart Interlock operating mode (see *Setting Operating Mode*, page 3-3). Table 2-7 shows operating mode option switch settings.

Table 2-7. Operating Mode Settings: Receiver Switch 1

Option	Receiver SWA Switch 1	Receiver SWB Switch 1
Automatic Start (Default)	OFF	OFF
Start/Restart Interlock	ON	ON

Enabling External Device Monitoring (EDM) (Receiver Switch 2)

External Device Monitoring, or EDM, is a safety function that monitors the Shadow 8 interface to the guarded machine, checks to ensure that the control elements are responding correctly to the light curtain, and detects any inconsistency between the two external control devices. EDM detects any malfunction within the interface that prevents a stop signal from reaching the machine controller. Table 2-8 shows selector switch settings for EDM.

Table 2-8. External Device Monitor (EDM) Settings: Receiver Switch 2

Option	Receiver SWA Switch 2	Receiver SWB Switch 2
EDM Disabled	OFF	OFF
EDM Enabled (Default)	ON	ON

If you enable EDM by setting SWA 2 and SWB 2 to "ON," you must also set SW1 EDM on the Main board in the optional Shadow 8 control box (see *Wiring Shadow 8 to EDM Monitor Inputs*, page 2-41) as follows:

- If the optional control is wired directly in series with the machine's E-stop circuit without any external relays, set SW1 EDM to "INT" (see figure 2 at the back of the manual)
- If the optional control is wired to external relays, set SW1 EDM to "EXT" (see figures 3 and 4 at the back of the manual)
- If the optional control is wired to a Wintriss Clutch/Brake Control, set SW1 EDM to "INT" (see figures 5 through 9 at the back of the manual).

NOTICE

WHEN SHADOW 8 HEADS ARE WIRED DIRECTLY TO WPC, SET EDM TO "DISABLED"

If you have wired your Shadow 8 Main Receiver and Transmitter to a WPC 1000 or WPC 2000 control, you must disable the EDM function on Receiver switch 2. Set the switch to "OFF" (see figures 11 through 13 at the back of the manual).

Setting Scan Codes (Receiver Switch 3, Transmitter Switch 1)

Scan codes are used to minimize cross-talk between two pairs of light curtains installed near one another. To prevent interference between the two sets of heads, one pair is set to scan code A, the other to scan code B. The receiver and transmitter in each pair must be set to the same scan code. Table 2-9 shows the selector switch settings.

Table 2-9. Scan Code Settings: Receiver Switch 3, Transmitter Switch 1

Option	Receiver SWA Switch 3	Receiver SWB Switch 3	Transmitter Switch 1
Scan code A (Default)	OFF	OFF	OFF
Scan code B	ON	ON	ON

Enabling Floating Blanking (Receiver Switch 4)

See *Setting a Floating Blanking Window*, page 3-7 for a discussion of floating blanking and instructions for setting a floating blanking window. Table 2-10 shows the selector switch settings for floating blanking.

Table 2-10. Floating Blanking Settings: Receiver Switch 4

Option	Receiver SWA Switch 4	Receiver SWB Switch 4
Floating blanking disabled (Default)	OFF	OFF
Floating blanking enabled	ON	ON

Enabling Programmable Fixed Blanking (Receiver Switch 5)

See *Programming a Fixed Blanking Window*, page 3-4 for a discussion of programmable fixed blanking and instructions for programming a fixed blanking window. Table 2-11 shows the selector switch settings for enabling programmable fixed blanking.

Table 2-11. Programmable Fixed Blanking Settings: Receiver Switch 5

Option	Receiver SWA Switch 5	Receiver SWB Switch 5
Fixed blanking disabled	OFF	OFF
Fixed blanking enabled (Default)	ON	ON

Setting Scanning Range (Receiver Switch 6)

Scanning range is the maximum distance between heads at which the LEDs in the transmitter can be read by the phototransistors in the receiver. Switch 6 allows you to select one of two scanning ranges for your Shadow 8 heads. The long range option, which is the default setting, is 65 ft. (20 m) minimum. The short range option is 26 ft. (8 m) minimum. Selecting the short range setting can help to prevent cross-talk when there are many light curtains operating in a small space. Table 2-12 shows the selector switch settings for scanning range. Only switch SWB 6 needs to be set; switch SWA 6 is not used.

Table 2-12. Scanning Range Settings: Receiver Switch 6

Option	Receiver SWA Switch 6	Receiver SWB Switch 6
Short range	Not used	OFF
Long range (Default)	Not used	ON

Enabling Machine Test Signal (MTS) (Transmitter Switch 2)

Machine Test Signal (MTS) is not a supported Shadow 8 feature. Leave Transmitter switch 2 in its default OFF position. Do not enable MTS by moving switch 2 to ON.

Connecting AC Wiring to Power Source

If you have connected your light curtains to the optional Shadow 8 control, check to make sure that all connections are secure and that all conduits are in place before connecting AC power. Leave the transmitter and receiver loosely mounted. Then, connect the 115 Vac wires from the control to the 115 Vac source. Make sure power is off before making connections.

Aligning and Tightening Down Shadow 8 Heads

⚠ DANGER

TURN OFF HAZARDOUS EQUIPMENT DURING ALIGNMENT

Remove power from the press and other hazardous machinery while you are aligning the light curtain transmitter and receiver.

Failure to comply with these instructions will result in death or serious injury.

If your brackets have been installed in the same horizontal and vertical plane (see *Aligning Brackets*, page 2-21), alignment of your Shadow 8 optic heads should be relatively simple. As long as the field of each phototransistor in the receiver is anywhere within the funnel-shaped path of the corresponding light beam emitted by the transmitter (see Figure 2-25, page 2-50), the two heads will align. Nevertheless, you should attempt to align your Shadow 8s as precisely as possible. Even a slight bump can knock an imprecisely aligned head out of alignment.

When Shadow 8 heads are out of alignment, one or more transmitter beams are not detected by the receiver, causing the Shadow 8 safety relays to open and stay open and your press to be emergency-stopped. Individual Beam Indicator LEDs (IBIs) on the misaligned segment illuminate when heads are out of alignment, and the Machine Run/Stop LED on the Main Receiver is illuminated red.

IBI misalignment displays occur in two stages. The first stage, in which alternate IBIs along the length of the misaligned head are illuminated, indicates that the required number of consecutive beams are not aligned. The consecutive beam rule, which applies also to blanking windows (see page 3-6), stipulates that between 7 and 9 consecutive beams on Main transmitters or 2 consecutive beams on Extension transmitters must be detected by the matching receiver in order for the press to run. The consecutive beams rule ensures that Shadow 8 receiver(s) and transmitter(s) are able to synchronize their sequencing (see *Shadow 8 Operation*, page 1-6). The number of consecutive beams that must be aligned on Main transmitters depends on the length of the heads, as shown in Table 2-13, page 2-50. The consecutive beam requirement for Extensions is also shown.

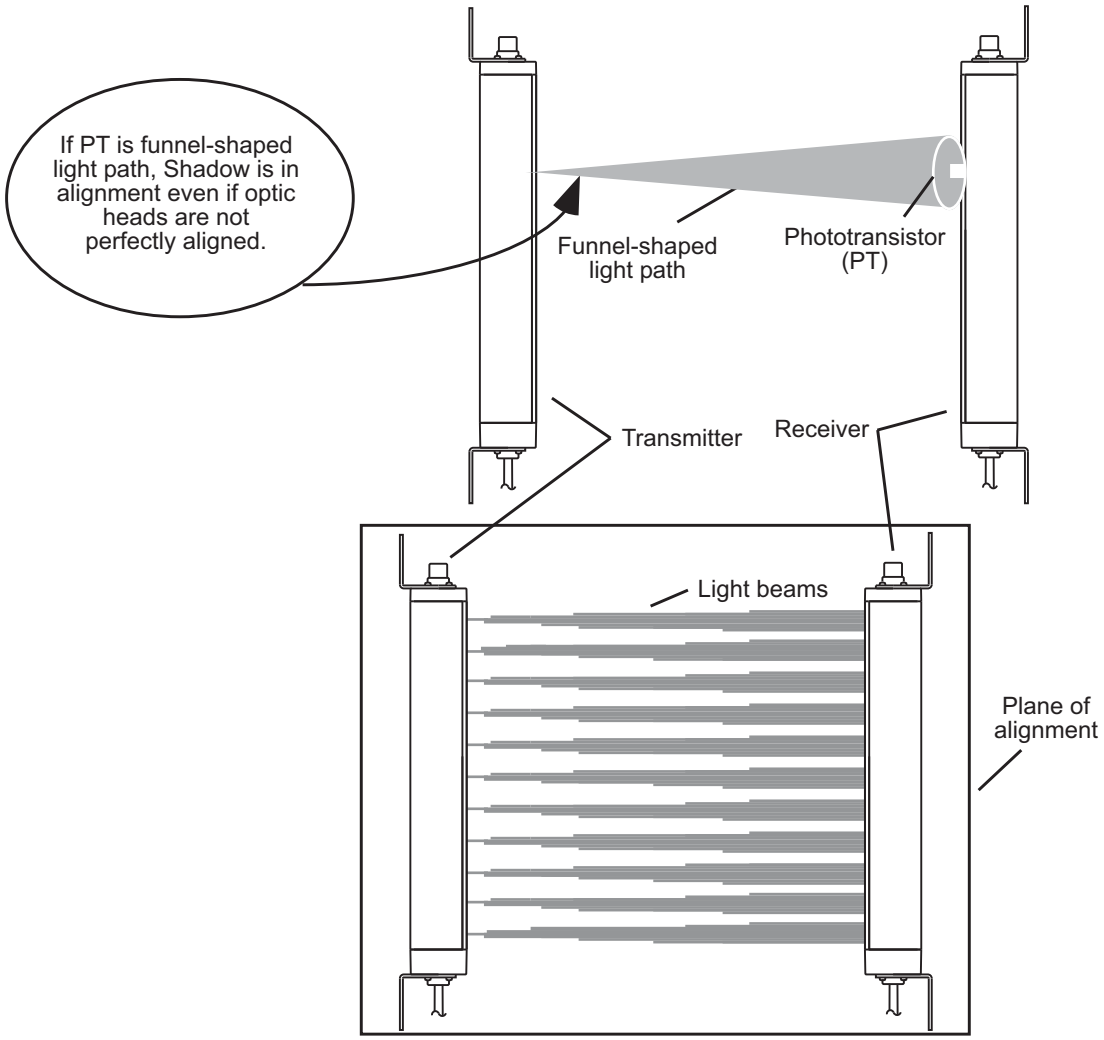

Figure 2-25. Transmitter and Receiver Properly Aligned

Table 2-13. Consecutive Beam Alignment Requirement

Main Heads	Shadow 8 Model	Required No. of Consecutive Beams Aligned *
	12.8 in. (320 mm)	7
	17.5 in. (440 mm)	7
	23.8 in. (600 mm)	7
	30.0 in. (760 mm)	8
	36.3 in. (920 mm)	8
	47.4 in. (1200 mm)	8
	59.9 in. (1520 mm)	9
Extension Heads	All models	2

The first IBI display stage cannot be cleared by simply aligning the misaligned beams. In order to clear the alternate IBI display, you must correct the misalignment, then cycle power to the Shadow 8.

The second IBI display stage occurs only when the consecutive beam rule is satisfied. In this display, Individual Beam Indicator LEDs next to additional misaligned beams are illuminated. IBIs turn off when the misalignment is corrected.

To align Shadow 8 heads, perform the following steps:

1. Make sure that transmitter and receiver are mounted so the lenses are pointed at each other.

> **NOTICE**
>
> When powering up Shadow 8, do not turn on power to the press.

2. Power up Shadow 8.
3. Place Shadow 8 in Automatic Start operating mode (see *Setting Operating Mode*, page 3-3).
4. Making sure that the light curtain is unobstructed, check the operating state and Individual Beam Indicator LEDs.
   - Machine Run/Stop LED is illuminated green when the heads are aligned
   - Machine Run/Stop LED is illuminated red when one or more beams are misaligned
   - Alternate Individual Beam Indicator LEDs are lit when the required number of consecutive beams are not aligned

     or

     Individual Beam Indicator LEDs next to beams that are out of alignment are lit

> **NOTICE**
>
> When attempting to adjust misaligned beams to satisfy the consecutive beam rule, you cannot use the Individual Beam Indicator LEDs for guidance since alternate IBIs remain illuminated until power is cycled to the Shadow 8. You will have to make head adjustments without immediate IBI feedback, turning the Shadow 8 off, then back on after each adjustment to determine if alignment has been corrected.

5. Tighten one of the heads so it will not move, then swivel the other one horizontally and push up/pull down on it vertically to see how tight alignment tolerances need to be. Watch the LED indicators to determine when the light curtains are aligned (Machine Run/Stop LED is green) and when they are not (Machine Run/Stop LED is red and Individual Beam Indicator LEDs are lit).
6. When you have finished experimenting with alignment tolerances, position the heads so they are once more aligned.
7. Check the accuracy of the alignment by moving the shank of a 1/8-in. screwdriver up and down through the sensing field. Since the diameter of the screwdriver is much smaller than the 1.18-in. object sensitivity of the light curtain, passing this object through the light field should not cause the Machine Run/Stop LED to turn red or Individual Beam Indicator LEDs to illuminate unless the transmitter and receiver are out of alignment. The

beams that are misaligned can be identified by looking for illuminated red Individual Beam Indicator LEDs on the receiver.

8. Begin tightening down each head, starting with the transmitter, then moving to the receiver. If the units go out of alignment, make adjustments, then start tightening again. Tighten each unit down firmly.
9. Double-check the LEDs. If the Machine Run/Stop LED is red or any Individual Beam Indicator LED is lit, you will have to loosen your mounting bolts, re-align the heads, and then re-tighten them.

> **NOTICE**
>
> Do not begin press operation until you have completed the checkout sequence.

10. Proceed to the checkout and test procedures starting on page 2-55).

Diagnosing Problems *Before* Using Shadow 8

> **⚠ DANGER**
>
> **MAKE SURE TO PERFORM SAFETY SYSTEM TESTS**
>
> - Perform the checkout and test procedures (see page 2-55) when you have completed installation of your light curtain and before operating the equipment it is connected to.
> - Operate your machinery only after your safety system meets all the requirements of the checkout and test procedures.
> - Perform the test procedure whenever repair, maintenance or modification is performed on your light curtain or the machinery it is connected to.
>
> **Failure to comply with these instructions will result in death or serious injury.**

If your Shadow 8 light curtain does not operate correctly after you have aligned the heads, use the following diagnostic steps to troubleshoot the unit. If you need help, call Wintriss Tech. Support.

No Power to Unit

If the optional Shadow 8 control has no power, check power fuse F1 on the Main board (see Figure 2-20, page 2-32) and replace if necessary. Also check that power connections have been made correctly (see *Connecting AC Wiring to the Optional Control*, page 2-37).

Interlock/Alarm LED Is Illuminated

When the yellow Interlock/Alarm LED is lit, you must turn the Program/Run/Start key switch to START to reset the control to return Shadow 8 to a Curtains Unobstructed state. If you have trouble resetting the control to Curtains Unobstructed, power the system down, then back up. Turn the Program/Run/Start key switch to START.

Machine Run/Stop LED Not Illuminated Green

If the Machine Run/Stop LED on the Main Receiver is not illuminated green and there is no object in the light field, dirt on one or both lens windows may be blocking a light beam. Try cleaning the lens windows (see page 4-7 for instructions).

NOTICE

In a multi-segment system, if the Machine Run/Stop LED on the Main Receiver is red, check for illuminated IBIs on Extension receivers. Alternately illuminated IBIs indicate that the minimum number of consecutive beams for that pair of heads are not aligned or are interrupted by a fixed blanking window. Single illuminated IBIs indicate misaligned LED/phototransistor pairs.

If, after the lens windows have been cleaned, the Machine Run/Stop LED is still not illuminated green, the next step is to bring the optic heads to within 12 in. of each other (but no closer). Unbolt either the receiver or transmitter (whichever is more convenient), take the unbolted unit off its mounting, and hold it directly in front of the other head. You may need to disconnect and reconnect wiring so the heads will reach.

NOTICE

Power down the control before connecting or disconnecting the wires to the heads.

Make sure the lenses are pointed directly at one another and the Shadow 8 heads are mounted in the same horizontal and vertical plane.

If the Machine Run/Stop LED is illuminated green after you have brought the heads close together, there is a problem with your installation. Reread the instructions starting on page 2-15 to be sure you understand how Shadow 8 heads should be mounted. When you adjust your brackets so they are in the same horizontal and vertical plane, the Shadow 8 transmitter and receiver should align.

If the Machine Run/Stop LED is not illuminated green after adjusting the mounting brackets, your Shadow 8s probably have an internal problem. Call Wintriss Tech. Support for assistance.

Machine Run/Stop LED Is Green But Machine Won't Start

⚠ WARNING

GUARD AGAINST ELECTRIC SHOCK HAZARD

- Ensure that the power source is off before checking or replacing fuses.
- Turn off and disconnect power from the Shadow 8 safety light curtain and from the machinery it is connected to, including the machine control and motor, before making any wiring connections.
- Ensure that all procedures are performed by qualified personnel.

Failure to comply with these instructions could result in death or serious injury.

If the Machine Run/Stop LED is illuminated green, but you cannot start the press, check the stop relays on the relay board on the Shadow 8 Main board (see Figure 2-20, page 2-32), following the instructions in *Checking and Replacing Control Relays in Optional Shadow 8 Control Box*, page 4-9.

If the light curtains are connected directly to a new WPC clutch/brake control, check to make sure that the light curtain output type jumper on the WPC Main Processor board is set to "PNP" and the light curtain test mode jumper is set to "INT" (for Internal). See the appropriate WPC manual for further details.

Shadow 8 Control Box or WPC Power LED Dims and Blinks

If the Power LED on the Shadow 8 control box or WPC enclosure dims and blinks, a Receiver or Transmitter segment has shorted the 24 volt power internally. To determine the source of the problem, turn off power and unplug the Main Transmitter; then, turn the power back on. If the Power LED still dims and blinks, a Receiver segment is defective. If the Power LED behaves normally, a Transmitter is at fault.

If the problem is in a Receiver and there are no Extensions, the Main Receiver is defective. Return the unit to Wintriss for repairs. If there are Receiver Extensions, turn off power and disconnect the last Extension; then turn the power back on. If the Power LED behaves normally, the Receiver Extension you removed is defective. If the Power LED dims and blinks, another Extension is at fault. Continue removing Extension heads, one at a time, until you find the defective Receiver segment. Return the defective unit to Wintriss for repairs.

If the problem is in a Transmitter, follow the same process to isolate the defective Transmitter segment. Return the defective unit to Wintriss for repairs.

Performing Checkout and Test Procedures

⚠ DANGER

MAKE SURE TO PERFORM SAFETY SYSTEM TESTS

- Perform the checkout and test procedures when you have completed installation of your light curtain and before operating the equipment it is connected to.
- Operate your machinery only after your safety system meets all the requirements of the checkout and test procedures.
- Perform the checkout procedure at least once every three months. Perform the procedure more frequently if machine usage and company guidelines require.
- Perform the test procedure whenever repair, maintenance or modification is performed on your light curtain or the machinery it is connected to.

Failure to comply with these instructions will result in death or serious injury.

⚠ DANGER

CHANGE IN STOPPING TIME REQUIRES SAFETY DISTANCE ADJUSTMENT

- Repair your machinery stopping mechanism if its stopping time increases beyond the acceptable limit.
- Re-calculate the light curtain safety distance, using the new stopping time.
- Adjust the location of the light curtain(s) accordingly.
- Perform the test procedure before operating the equipment.

Failure to comply with these instructions will result in death or serious injury.

You must perform checkout and test procedures to make sure Shadow 8 is working properly before using the light curtains with your machinery.

Checkout Procedure

The following checkout procedure must be performed by qualified personnel during initial Shadow 8 installation and, after installation, at least once every three months. The procedure should be performed more frequently if machine usage and company guidelines require. (See Appendix B for a form you can use to document the results of the checkout procedure.)

1. Verify that the guarded machine is a type that may be used with the Shadow 8 system (see the Requirements page at the beginning of the manual).
2. Verify that the mounting distance of the Shadow 8 heads is equal to or greater than the minimum safe distance from the danger point (see *Calculating the Safety Distance*, page 2-2).
3. Determine that all access to the danger point not protected by the Shadow 8 system is guarded by other means, such as gates, fencing or other approved methods. Verify that all additional guarding devices are installed and operating properly.

4. Make sure the operator is not able to stand between the Shadow 8 sensing field and the machine danger point. Verify that the light curtain can only be reset from a position outside and within view of the hazardous machine area.
5. Inspect the electrical connections between the guarded machine's control system and the Shadow 8 system. Verify that wires are properly connected to the machine so that a stop signal from the Shadow 8 system results in an immediate halt of the machine's cycle (see *Connecting Stop Circuits to the Control*, page 2-39).
6. Record the test results in the machine log.

Test Procedure

The following test procedure must be performed by qualified personnel during initial Shadow 8 system installation, according to the employer's regular inspection program, and after any maintenance, adjustment or modification to the Shadow 8 system or the guarded machine. (See Appendix C for a form you can use to document the results of the test procedure.) Testing ensures that the light curtain, safety system, and machine control system work together to properly stop the machine. Failure to test properly could result in serious injury to personnel.

To test the Shadow 8 system, use the Wintriss-supplied test object (diameter 1.18 in. or 30 mm) or other opaque cylindrical object of the correct diameter. You should also test Shadow 8 alignment using the shank of a 1/8-in. (3.2 mm) screwdriver. If one-beam floating blanking is enabled, use an opaque test bar of 2.05 in. (52 mm).

1. Disable the guarded machine. Apply power to the Shadow 8 system.
2. Visually inspect the machine to ensure that access to the hazardous area is only through the Shadow 8 sensing field. If there are other access points, additional guarding, including mechanical barriers, may be required. Verify that all additional guarding devices and barriers are installed and operating properly.
3. Verify that the mounting distance of the Shadow 8 system is equal to or greater than the calculated minimum safety distance from the hazardous area (see *Calculating the Safety Distance*, page 2-2). Ensure that the operator is not able to stand undetected between the light curtain and the hazard.
4. Check for signs of external damage to the light curtain, the machine, and the electrical cables and wiring. If damage is found, lock the machine off and report to the supervisor.

NOTICE

FLOATING BLANKING SHOULD BE DISABLED DURING TEST

Floating blanking should be disabled when you perform the test procedure with the 1.18-in. test bar. Later you will enable floating blanking and repeat the test with a user-supplied 2.05-in. bar.

5. Interrupt the Shadow 8 sensing field with the shank of a 1/8-in. (3.2 mm) screwdriver to check the unit's alignment. Move the test object inside the perimeter (along the top, sides and bottom) of the sensing field and up and down through the center of the sensing field, as shown in Figure 2-26. The Machine Run/Stop LED on the Main Receiver should be illuminated green.

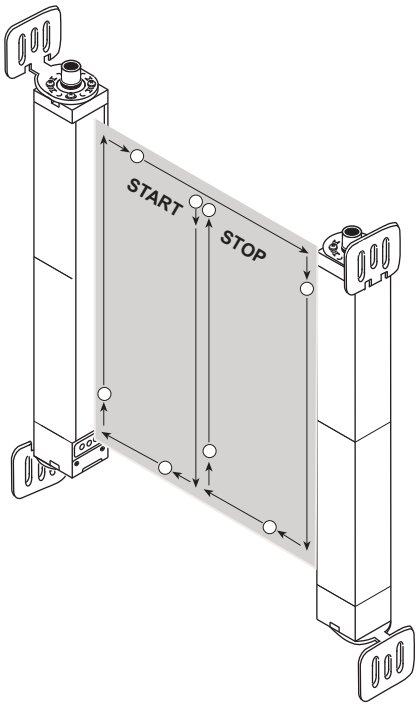

Figure 2-26. Test Object Pattern

If the Machine Run/Stop LED becomes illuminated red, the heads are misaligned. Align the heads precisely, using the Individual Beam Indicators (IBIs) to help you, before proceeding to step 6.

6. Interrupt the Shadow 8 sensing field with the 1.18-in. (30 mm) test object, using the pattern described in step 5. Verify that the Machine Run/Stop LED is illuminated red while the test object is anywhere in the sensing field. In addition, at least one Individual Beam Indicator LED must be lit while the test object is anywhere in the sensing field.

   If Shadow 8 is in Start/Restart Interlock mode, verify that the Machine Run/Stop LED is illuminated red (Curtains Obstructed) and the yellow (Interlock/Alarm) LED is lit. Turn the Program/Run/Start key switch to START before proceeding to step 7.

7. Enable the floating blanking option (see *Setting a Floating Blanking Window*, page 3-7), and repeat step 6, using the 2.05-in. (52 mm) test object.

8. Start the machine. With the machine in motion, interrupt the sensing field with the test object. The machine should stop immediately. (Never insert the test object into the dangerous parts of the machine.)

> **NOTICE**
>
> If muting is used, interrupting the light curtain during the non-hazardous portion of the stroke (upstroke) will not stop the machine. To test, you must interrupt the stroke on the downstroke, which is the hazardous portion of the stroke.

   With the machine at rest, interrupt the sensing field with the test object. Verify that the machine will not start with the test object in the sensing field.

9. Verify that the braking and machine stop systems are working properly in accordance with the machine manufacturer's requirements. If the machine does not stop fast enough, adjust the braking system or increase the distance from the sensing field to the point of hazard.

10. If the safety devices or the machine fails any of these tests, do not run the machine. Immediately lock out the machine to prevent its use and notify the supervisor.

Adding and Removing Extension Heads

⚠ DANGER

MAKE SURE TO PERFORM SAFETY SYSTEM TESTS

- Perform the checkout and test procedures whenever you add or remove light curtain Extension heads and before operating the equipment they are connected to.
- Operate your machinery only after your safety system meets all the requirements of the checkout and test procedures.
- Perform the test procedure whenever repair, maintenance or modification is performed on your light curtain or the machinery it is connected to.

Failure to comply with these instructions will result in death or serious injury.

⚠ DANGER

ADDITION/REMOVAL OF EXTENSION HEADS REQUIRES SAFETY DISTANCE ADJUSTMENT

- Re-calculate the light curtain safety distance whenever adding or removing Extension heads.
- Adjust the location of the light curtain(s) accordingly.
- Perform the test procedure before operating the equipment.

Failure to comply with these instructions will result in death or serious injury.

Adding Extension Heads

⚠ DANGER

You must cycle power to the light curtains after installing extensions; otherwise, Shadow 8 will not recognize the new heads.

Failure to comply with these instructions will result in death or serious injury.

Whenever you add Extension heads to your Shadow 8 system, perform the following steps:

1. Perform one of the two procedures documented in the *Connecting Extension Heads* section, page 2-35.
2. Recalculate the safety distance, and reposition the light curtains accordingly.
3. Perform checkout and test procedures as instructed starting on page 2-55.

Removing Extension Heads

⚠ DANGER

DO NOT LEAVE ANY SIDE OF MACHINE UNPROTECTED

- If you remove a pair of extension heads, make sure that you install an alternative means of safeguarding that side of the machine. Follow the machine guarding requirements of OSHA 1910.217, ANSI B11.1, ANSI B11.19, and any other regulations and standards that apply.
- Ensure that guarding is properly installed to prevent access to the machine over, under, or around any guarding device.
- If you do not install alternative safeguarding, you must Lockout/Tagout the press.

Failure to comply with these instructions will result in death or serious injury.

Whenever you disconnect a set of Extension heads from other light curtain segments, you must perform the following procedure. Otherwise, the other light curtain segments will not work.

1. Power down Shadow 8.
1. Unscrew the connectors on the pigtails of the heads you are removing from the connectors on the interconnect cables to the next light curtain segment or from the connectors on the light curtain heads, and unplug them from the connectors.
2. Power down Shadow 8, then power the unit back up.

   A “100” (Number of segments has been reduced) fault code displays.
3. Power down Shadow 8, then while holding the Program/Run/Start key switch on the Shadow 8 control box to the START position, power up the unit, watching the three operating state LEDs on the Main Receiver.
4. When the three operating state LEDs flash continuously, release the Program/Run/Start key switch.

   The “100” fault code is cleared, and the remaining light curtain segments will operate properly.

   NOTICE

   If you release the Program/Run/Start key switch after the operating state LEDs stop flashing, the “100” fault code will not be cleared.

5. Recalculate the safety distance, and reposition the light curtains accordingly.
6. Perform checkout and test procedures as instructed starting on page 2-55.

Chapter 3. Operation

This chapter shows you how to

- Interpret the LEDs on the Shadow 8 Main Receiver and Transmitter and optional control
- Use the LED indicators to determine Shadow 8's operating state
- Set the Shadow 8 operating mode
- Program a fixed blanking window
- Enable floating blanking

Shadow 8 LED Displays

Shadow 8 has LED displays on Main and Extension Receivers and on the optional control box to provide information about light curtain operation. There are four types of LED displays:

- Three operating state LEDs located on the pigtail end of the Main Receiver (see Figure 1-1, page 1-3)
- One status LED indicator located on the pigtail end of the Main Transmitter
- Individual Beam Indicator (IBI) LEDs next to each phototransistor on the receiver
- Power and safety relay LEDs on the cover of the optional control box (see Figure 1-3, page 1-5)

Operating state LEDs on the Main Receiver provide the following information about Shadow 8 operation (see *Shadow 8 Operating States*, page 3-2):

- Machine Run/Stop (Green/Red) LED–When LED is green, light curtains are unobstructed, and both safety relays are "closed" (or energized). When LED is red, light curtains are obstructed, Shadow 8 has experienced an internal fault, optic heads are misaligned, or the control has not been re-started after an Interlock or Alarm state. Both safety relays are "open" (or de-energized). The state of the Interlock/Alarm LED (see next item) indicates the cause of the red Machine Run/Stop LED.
- Interlock/Alarm (Yellow) LED–Light curtains are obstructed (LED lit continuously) or Shadow 8 has experienced an internal fault (LED flashing).
- Blanking Active (Amber) LED–Programmable fixed blanking and/or floating blanking feature has been enabled. Fixed blanking is enabled by default.

The status LED indicator on the Main Transmitter, which is yellow, is lit when wiring connections between the Main Transmitter and Wintriss Clutch/Brake control or optional Shadow 8 control are good.

The red Individual Beam Indicator LED next to each phototransistor on the receiver becomes lit whenever the light pulse from the corresponding beam on the transmitter is not detected. These Individual Beam Indicators signal either a penetration of the light curtain or receiver/transmitter misalignment. Alternate IBIs illuminate on a misaligned receiver when the required number of consecutive beams are not aligned (see Table 2-13, page 2-50) or are interrupted by a fixed blanking window (see Table 3-1, page 3-6). Instructions for using IBIs to help align Shadow 8 optic heads is provided starting on page 2-49.

Illuminated IBIs also identify the beams programmed as a fixed blanking window whenever the amber Blanking Active LED is lit. When the obstruction being blanked is present, the Machine Run/Stop LED is lit green. When the obstruction is removed, the IBIs defining that area of the light curtain remain lit, but the Machine Run/Stop LED turns red.

Selected IBIs also illuminate whenever there is a fault condition, which is indicated by a continuously lit red Machine Run/Stop LED and a flashing Interlock/Alarm LED. Each digit of the fault code is represented by a string of consecutively illuminated IBIs separated by an unlit IBI and terminated by a string of unlit IBIs (see Figure 4-1, page 4-2 for an example). Fault codes are documented, including suggested remedies for each fault, in Chapter 4 of this manual (see *Troubleshooting with Fault Codes*, page 4-1).

The green Power LED indicator on the cover of the optional control box is illuminated when power is being applied to the control. The two green safety relay LEDs, labelled “OSSD 1” and “OSSD 2,” are illuminated when the safety relays are “closed,” or energized. When the safety relays are “open,” or de-energized, these two LEDs turn off.

Shadow 8 Operating States

Shadow 8 can be in one of five operating states, which are specified by the LED indicators on the Main Receiver:

- **Machine Run**

  The Machine Run/Stop LED is illuminated green, the two safety relays are “on,” and the auxiliary output is in a state consistent with its configuration. The protected machine is allowed to operate. Turning the Program/Run/Start key switch to START has no effect.
- **Machine Stop**

  The Machine Run/Stop LED is illuminated red, the two safety relays are “off,” and the auxiliary output is in a state consistent with its configuration. The protected machine is not allowed to operate.
- **Interlock**

  The Machine Run/Stop LED is illuminated red, the yellow Interlock/Alarm LED is lit, the two safety relays are “off,” and the auxiliary output is in a state consistent with its configuration. The Interlock state can only be cleared when the sensing field is free of obstructions and the Program/Run/Start key switch is turned to the START position.
- **Alarm**

  The Machine Run/Stop LED is illuminated red, the yellow Interlock/Alarm LED is flashing, the two safety relays are “off,” and the auxiliary output is “off.” The Alarm state can only be cleared when the problem that caused the alarm is corrected and either power is recycled to Shadow 8 or the Program/Run/Start key switch is turned to the START position.
- **Blanking Fixture Removed**

  The amber Blanking Active LED is lit, the Machine Run/Stop LED is illuminated red, the two safety relays are “off,” and the auxiliary output is in a state consistent with its configuration. The protected machine is not allowed to operate. To clear this state, replace the fixture in its original position, which is defined by a consecutive string of illuminated IBIs, or program a new blanking window with a different object or no object.

Setting Operating Mode

You can set Shadow 8 to operate in one of two modes: Automatic Start or Start/Restart Interlock.

Automatic Start

In Automatic Start operating mode, Shadow 8 powers up with its safety relays “open,” performs a system initialization test and a self-test, and, if no internal faults are encountered and no obstructions are present in the sensing field (or a programmable fixed blanking pattern is satisfied), the system enters the Curtains Unobstructed state (see *Shadow 8 Operating States*, page 3-2). When an object is detected in the sensing field, Shadow 8 changes from Curtains Unobstructed to Curtains Obstructed. After the object has been cleared, Shadow 8 automatically switches to the Curtains Unobstructed state.

Start/Restart Interlock

In Start/Restart Interlock operating mode, Shadow 8 powers up with its safety relays “open,” performs a system initialization test and a self-test, and, if no internal faults are encountered and no obstructions are present in the sensing field (or a programmable fixed blanking pattern is satisfied), the system enters the Interlock state. To switch to Curtains Unobstructed, the operator must turn the Program/Run/Start key switch to the START position with the sensing field unobstructed or a programmable fixed blanking pattern satisfied.

When an object is detected entering the sensing field in the Curtains Unobstructed state, Shadow 8 changes from Curtains Unobstructed to Interlock. Shadow remains in the Interlock state after the object has been cleared until the operator turns the Program/Run/Start key switch to the START position and Shadow 8 switches to Curtains Unobstructed. If the key switch is turned to START when there is an object in the sensing field, Shadow 8 remains in Interlock.

Operating mode settings are made on option switches SWA 1 and SWB 1 on the Main Receiver (see page 2-46).

NOTICE

You must set the paired DIP switches on the Main Receiver (except switch 6) to the same position. If the switches are not set identically, a fault condition is generated.

Switches SWA 1 and SWB 1 are set to OFF, the Automatic Start position, by default. To select the Start/Restart Interlock operating mode, set switches SWA 1 and SWB 1 to ON.

Programming a Fixed Blanking Window

⚠ DANGER

OBSERVE CORRECT SAFETY DISTANCE WHEN USING BLANKING WINDOWS

- Ensure that the correct safety distance exists between the light curtain and the hazardous area. See *Calculating the Safety Distance*, page 2-2 for detailed information on object sensitivity, depth penetration factor, and OSHA and ANSI safety distance formulas.
- Add 5.38 in. (136.6 mm) to the calculated safety distance for a one-beam fixed blanking window; add 2.69 in. (68.3 mm) for a one-beam floating window (see *Increasing Safety Distance To Compensate for Blanking Windows*, page 2-10).
- When more than one beam is programmed as a fixed blanking window, and the blanked area is not completely obstructed, the depth penetration factor is at least 36 in. (0.91 m).
- You do not have to change the safety distance if the blanked area is entirely blocked by a fixture from the transmitter to the receiver so that operator intrusion into this area is impossible.
- **Failure to comply with these instructions will result in death or serious injury.**

⚠ DANGER

PREVENT UNAUTHORIZED PERSONNEL FROM PROGRAMMING FIXED BLANKING WINDOWS

A method of supervisory control, such as use of a key switch, must be employed to limit access to Shadow 8's programmable fixed blanking feature so that only a qualified person is able to program a fixed blanking window.

Failure to comply with these instructions will result in death or serious injury.

NOTICE

MARK CORRECT MINIMUM OBJECT RESOLUTION ON SERIAL NUMBER LABELS

During installation strike out with a permanent marker the minimum object resolutions printed on the serial number labels of receivers and transmitters that do not apply to your system. Make sure to adjust the object resolution based on any blanking windows that have been set (see *Increasing Safety Distance To Compensate for Blanking Windows*, page 2-10). Four object resolutions are printed on each label.

Shadow 8 allows you to program an area within the sensing field into which a stationary fixture may protrude without triggering a Curtains Unobstructed state and stopping the guarded machine. This programmed area, which is created by disabling the beams that normally protect it, is called a fixed blanking window. Fixed blanking windows may span any number of beams, but at least 7 to 9 contiguous beams on Main heads and at least 2 contiguous beams on Extensions must remain unprogrammed.

When using fixed blanking, make sure that all unobstructed areas of the blanking window are protected by supplemental guarding so that the operator has no access to the pinch point through the blanked beams (see Figure 3-1, page 3-5).

Shadow 8's fixed blanking feature is useful in situations where, for example, a conveyor or work table extends into the sensing field and moving the fixture may not be feasible. You program a blanking window at the Shadow 8 control or WPC press control for the area of the sensing field penetrated by the fixture, disabling the light beams that would normally detect the fixture. Areas above and below the fixture remain guarded, so if they are penetrated, Shadow 8 sends a stop signal to the machinery.

Fixed blanking windows must remain obstructed. If the obstruction is removed, the Machine Run/Stop LED is illuminated red.

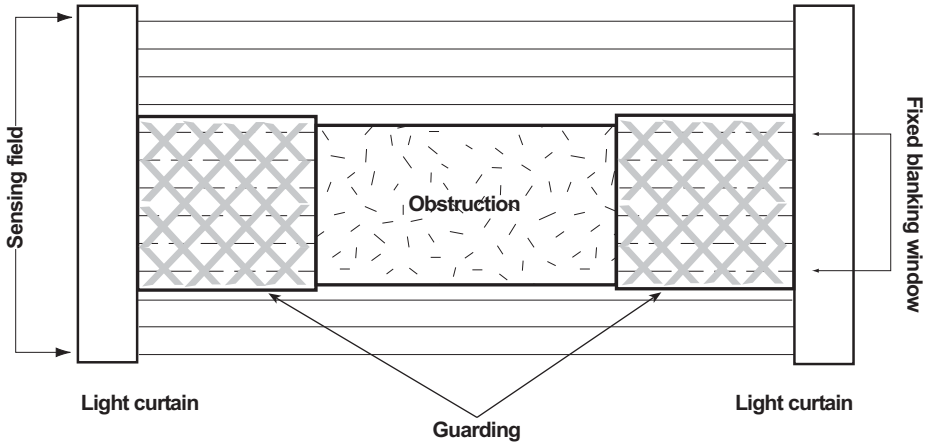

Figure 3-1. Using Supplemental Guarding with Fixed Blanking Windows

More than one fixed blanking window may be programmed for a standalone pair of light curtains as long as the number of consecutive unobstructed beams required for that Shadow 8 model is satisfied. When a light curtain system consists of as many as four pairs of heads, additional fixed blanking windows can be programmed as long as 7 to 9 consecutive beams on Main heads and 2 consecutive beams on Extension heads remain unobstructed. This requirement is the same as the consecutive beam rule that obtains for head alignment (see page 2-49). When the rule is not satisfied, the Machine Run/Stop LED flashes red and the Blanking Active LED flashes amber at the same time.

The number of consecutive beams that must remain clear on Main heads depends on the number of beams in the light curtain. A minimum number of consecutive beams must remain clear to allow Shadow 8 receiver(s) and transmitter(s) to synchronize their sequencing (see *Shadow 8 Operation*, page 1-6). Table 3-1, page 3-6 shows the number of consecutive beams that must remain unblanked for each model of Shadow 8 Mains and for all models of Shadow 8 Extensions.

Table 3-1. Consecutive Beam Requirement for Programmable Blanking

Main Heads	Shadow 8 Model	Required No. of Consecutive Beams Unobstructed
	12.8 in. (320 mm)	7
	17.5 in. (440 mm)	7
	23.8 in. (600 mm)	7
	30.0 in. (760 mm)	8
	36.3 in. (920 mm)	8
	47.4 in. (1200 mm)	8
	59.9 in. (1520 mm)	9
Extension Heads	All models	2

In order to prevent vibration from activating the light curtain unnecessarily, Shadow 8 has been designed to allow some flexibility in the area covered by programmable fixed blanking windows. Each fixed blanking window has a positional tolerance of ± 1 beam, allowing the object to move up or down by 1 beam without causing a Curtains Obstructed operating state. As a result, when determining the safety distance for a fixed blanking window, you must include an additional beam in your calculations. See *Increasing Safety Distance To Compensate for Blanking Windows*, page 2-10.

If you program two fixed blanking windows on the same head, there must be a minimum of two unblanked beams between the blanked areas to allow vibration in either blanked object. In other words, if there is only one unblanked beam between two fixed blanking windows, that beam must remain unobstructed all the time.

Fixed blanking is enabled via option switches SWA 5 and SWB 5 on the Main Receiver (see Figure 2-24, page 2-46 and *Enabling Programmable Fixed Blanking (Receiver Switch 5)*, page 2-48). "Fixed Blanking Enabled" is the default setting. When fixed blanking is enabled, the amber Blanking Active LED on the Main Receiver becomes illuminated.

A fixed blanking window is programmed using the Program Off/On and Program/Run/Start key switches on the optional Shadow 8 control or WPC front panel.

To program a fixed blanking window, do the following:

1. With Shadow 8 in the Curtains Unobstructed state (i.e., Machine Run/Stop LED indicator is illuminated green), place the object (e.g., conveyor, table, etc.) between the receiver and transmitter.

   Shadow 8 enters a Curtains Obstructed state (i.e., Machine Run/Stop LED indicator is lit red). The red Individual Beam Indicator LEDs next to the beams on the receiver that are blocked by the object are lit, and the amber Blanking Active LED continues to be illuminated.

2. Perform the following steps in quick succession:
   a. Turn the Program Off/On key switch to the ON position, and hold it there. The red and amber LEDs and blanked IBIs remain lit.
   b. Turn the Program/Run/Start key switch to the PROG position, then release the switch. The red and amber LEDs and blanked IBIs begin flashing.

NOTICE

Wait at least half a second but no more than 10 minutes before turning the Program/Run/Start key switch to the PROG position a second time.

c. Wait a few moments, then turn the Program/Run/Start key switch to PROG again, and release the switch. The red and amber LEDs and blanked IBIs continue flashing; the yellow Interlock/Alarm LED illuminates.

d. Release the Program Off/On key switch, allowing it to return to OFF. The red and amber LEDs and blanked IBIs continue flashing, and the yellow LED remains lit.

3. Turn the Program/Run/Start key switch to the START position to reset the unit. Shadow 8 enters the Curtains Unobstructed state (i.e., Machine Run/Stop LED indicator is lit green). The amber Blanking Active LED becomes steadily illuminated, and the red IBIs in the obstructed area are lit continuously.

To program a new fixed blanking window or no blanking window, perform steps 1 through 3 using a new object or no object.

NOTICE

If you remove the object while fixed blanking is active, you can return it to the same position without having to reprogram fixed blanking. Simply replace the object in the area defined by the illuminated Individual Beam Indicator LEDs. If Shadow 8 is in Start/Restart Interlock mode, you must reset the system after replacing the object by turning the Program/Run/Start key switch to START.

Setting a Floating Blanking Window

⚠ DANGER

OBSERVE CORRECT SAFETY DISTANCE WHEN USING FLOATING WINDOW

- Ensure that the correct safety distance exists between the light curtain and the hazardous area. See *Calculating the Safety Distance*, page 2-2 for detailed information on object sensitivity, depth penetration factor, and OSHA and ANSI safety distance formulas.
- Add 2.69 in. (68.3 mm) to the calculated safety distance for the one-beam floating blanking window (see *Increasing Safety Distance To Compensate for Blanking Windows*, page 2-10).
- Place ability to set floating blanking windows under supervisory control to avoid unauthorized usage.

Failure to comply with these instructions will result in death or serious injury.

NOTICE

MARK CORRECT MINIMUM OBJECT RESOLUTION ON SERIAL NUMBER LABELS

During installation strike out with a permanent marker the minimum object resolutions printed on the serial number labels of receivers and transmitters that do not apply to your system. Make sure to adjust the object resolution based on any blanking windows that have been set (see *Increasing Safety Distance To Compensate for Blanking Windows*, page 2-10). Four object resolutions are printed on each label.

Shadow 8's floating blanking feature allows you to disable one beam at any location along the length of the light curtain, letting any object 1 in. or smaller penetrate the sensing field in a random pattern without causing the light curtain to enter a Curtains Obstructed state. In multi-segment installations, the floating beam may be used in any segment.

Floating blanking is useful in those applications where material must travel through or within the sensing field in a random pattern. A one-beam floating window can only be used when material or parts take up a space no greater than 1 in. (25.4 mm). Larger material would block more than one light beam at a time and cause a stop command to be generated.

Figure 3-2 shows how coil stock interrupts different light beams as the coil unwinds. When one-beam floating blanking is active, the coil may interrupt one beam at a time at any point along the length of the light curtain without triggering an emergency stop of the guarded machine.

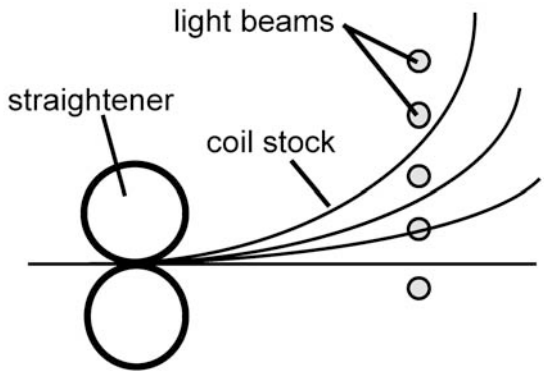

Figure 3-2. Coil Stock Unwinding Using a One-beam Floating Window

A one-channel floating window automatically alters the object sensitivity from 1.18 in. (30 mm) to 2.05 in. (52 mm). If you plan to use this feature even occasionally, the safety distance at which light curtains are mounted must be increased (see page 2-10). When you are using more than one pair of light curtains, you must increase the safety distance for every segment in the multi-segment series.

Floating blanking windows are enabled via option switches SWA 4 and SWB 4 on the Main Receiver (see page 2-48). When floating blanking has been enabled, the amber Blanking Active LED on the Main Receiver becomes illuminated.

To enable a floating blanking window, do the following:

1. With Shadow 8 in the Curtains Unobstructed state (i.e., Machine Run/Stop LED indicator is lit green), set option switches SWA 4 and SWB 4 on the Main Receiver to ON.

   If Shadow 8 is in Automatic Start operating mode, the amber Blanking Active LED indicator becomes illuminated. If the mode is Start/Restart Interlock, perform step 2.

2. Turn the Program/Run/Start key switch to START. The amber Blanking Active LED becomes illuminated.

Enabling Both Blanking Options

⚠ DANGER

OBSERVE CORRECT SAFETY DISTANCE WHEN USING BLANKING WINDOWS

- Ensure that the correct safety distance exists between the light curtain and the hazardous area. See *Calculating the Safety Distance*, page 2-2 for detailed information on object sensitivity, depth penetration factor, and OSHA and ANSI safety distance formulas.
- Add 5.38 in. (136.6 mm) to the calculated safety distance for a one-beam fixed blanking window; add 2.69 in. (68.3 mm) for a one-beam floating window (see *Increasing Safety Distance To Compensate for Blanking Windows*, page 2-10).
- When more than one beam is programmed as a fixed blanking window, and the blanked area is not completely obstructed, the depth penetration factor is at least 36 in. (0.91 m).
- You do not have to change the safety distance if the blanked area is entirely blocked by a fixture from the transmitter to the receiver so that operator intrusion into this area is impossible.
- Place ability to set floating blanking windows under supervisory control to avoid unauthorized usage.

Failure to comply with these instructions will result in death or serious injury.

NOTICE

MARK CORRECT MINIMUM OBJECT RESOLUTION ON SERIAL NUMBER LABELS

During installation strike out with a permanent marker the minimum object resolutions printed on the serial number labels of receivers and transmitters that do not apply to your system. Make sure to adjust the object resolution based on any blanking windows that have been set (see *Increasing Safety Distance To Compensate for Blanking Windows*, page 2-10). Four object resolutions are printed on each label.

Programmable fixed blanking and floating blanking can be used simultaneously. Both features, for example, can be used in an application where part of the tool physically protrudes into the light field and an air blow-off randomly ejects parts. You would program a fixed blanking window for the tool and a floating blanking window for the air-ejected parts.

If you program two fixed blanking windows on the same head, there must be a minimum of two unblanked beams between the blanked areas to allow vibration in either blanked object. In other words, if there is only one unblanked beam between two fixed blanking windows, that beam must remain unobstructed all the time. A floating blanking window will not affect the one unblanked beam.

Chapter 4. Troubleshooting

⚠ DANGER

PERFORM ONLY AUTHORIZED REPAIRS

- Replace only the power fuse and control Relay board.
- Obtain replacement fuse and Relay board from Wintriss Controls.
- DO NOT replace any other components. If you do, this will violate the warranty.
- Ensure that repairs are made by qualified personnel. Improper repair by unqualified personnel may put operators at risk of injury.

Failure to comply with these instructions will result in death or serious injury.

CAUTION

DO NOT MAKE OR BREAK CONNECTIONS WITH POWER ON

Power down Shadow 8 before connecting or disconnecting any wiring at the control, transmitter or receiver.

Failure to comply with these instructions could result in property damage.

This chapter shows you how to respond to the fault codes that display on the Individual Beam Indicators (IBIs) on the Shadow 8 Main Receiver and test and repair a few Shadow 8 components.

Shadow 8 has complex electronics. You should not attempt to test or repair components on the Shadow 8 circuit boards unless authorized to do so. Circuit board testing and repair should be left to technicians trained in Shadow 8 operation.

There are a few tests and repairs, however, that you can perform yourself. In many cases, you can get an inoperative Shadow 8 working again just by changing a blown fuse, replacing the control Relay board, or re-aligning Shadow 8 heads.

If you find serious problems, the defective component (optic head or circuit board) must be factory-repaired. However, once you know which unit is bad, you may be able to substitute another unit for the faulty one until the repairs are made.

Troubleshooting with Fault Codes

The Individual Beam Indicators (IBIs) at the pigtail end of the Main Receiver display fault codes indicating problems that must be corrected in order to return Shadow 8 to a Curtains Unobstructed state. These codes are displayed on the IBIs whenever the Machine Run/Stop LED indicator is illuminated red and the yellow Interlock/Alarm LED indicator is flashing. Codes are two digits except for the “100” and “101” codes (see Table 4-1, page 4-2). Two-digit codes are represented by two strings of consecutively illuminated, flashing IBIs separated by an unlit IBI and terminated by a string of unlit IBIs (see Figure 4-1, page 4-2, which uses fault code “34” as an example). The string of IBIs for the first digit begins at the first IBI at the pigtail end of the Main Receiver.

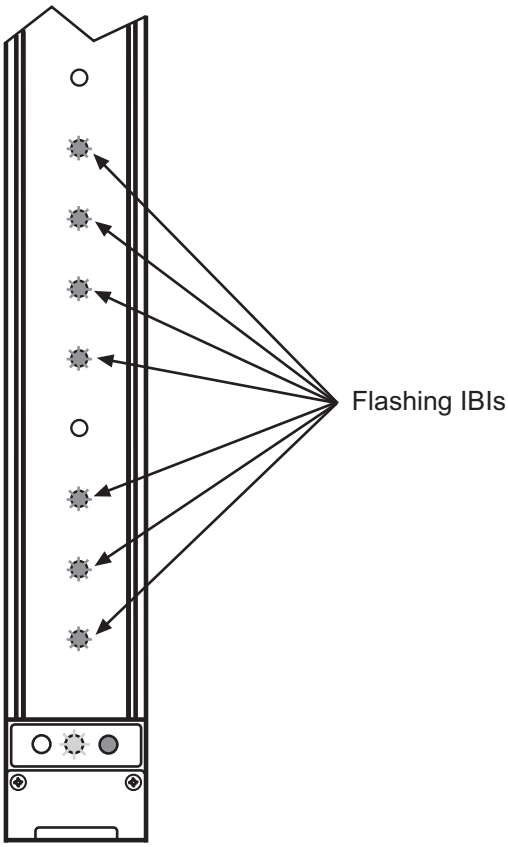

Figure 4-1. Fault Code "34" Displayed on Individual Beam Indicators on Main Receiver

When one or more digits of the code are zero (i.e., 30, 100, etc.), the IBIs representing zero remain unlit. Code "30," for example, is displayed as three flashing IBIs, code "100" as one flashing IBI, and code "101" as two flashing IBIs separated by an unlit IBI.

Table 4-1 shows you how to correct the problem(s) associated with each fault code.

Table 4-1. Shadow 8 Fault Codes

Fault Code	System Status	Corrective Action
Option Switch (Receiver) Faults		
21	Incorrect Operating Mode switch setting	Check setting of option switch 1 on Main Receiver (see page 2-46).
22	Option switch settings changed during operation	Turn Program/Run/Start key switch to START, or cycle power.
23	Option switch settings do not match	Check to see that option switch positions 1 through 5 on Main Receiver are set the same on both switch SWA and switch SWB (see page 2-45).
24	Corrupted EPROM configuration.	Reset option switches to their factory defaults (see page 2-45).
26	Invalid Scan Code setting	Check setting of option switch 3 on Main Receiver and switch 1 on Main Transmitter (see page 2-47).

Table 4-1. Shadow 8 Fault Codes (Cont.)

Fault Code	System Status	Corrective Action
Safety Output (OSSD) Faults		
30	General safety output (OSSD) fault	1. Check wiring to see if OSSD 1 shorted to OSSD 2. Correct wiring if necessary. See page 2-39. 2. Check wiring to see if OSSD 1 or OSSD 2 shorted to power. Correct wiring if necessary. See page 2-39. 3. Check wiring to see if OSSD 1 or OSSD 2 shorted to ground. Correct wiring if necessary. See page 2-39.
31	Safety outputs 1 and 2 are shorted together.	Check and correct wiring of safety outputs 1 and 2.
32	Safety output 1 shorted to power	Check and correct wiring of safety output 1.
33	Safety output 2 shorted to power	Check and correct wiring of safety output 2.
34	Safety output 1 shorted to ground	Check and correct wiring of safety output 1.
35	Safety output 2 shorted to ground	Check and correct wiring of safety output 2.
EDM Faults		
40	General EDM fault.	Possible incorrectly wired EDM circuit. Check and correct wiring if necessary. See page 2-41.
41	EDM circuit did not open before transition to Machine Run state	Check and correct EDM wiring.
42	EDM circuit did not open after transition to Machine Run state	Check and correct EDM wiring.
43	EDM circuit was in wrong state during power-up	Check and correct EDM wiring.
44	EDM fault at power-up	Check START input wire or EDM function selection.
Controller Fault		
50	Control logic fault	Return receiver to Wintriss for repair.
Setup Error		
60	Possible cross-talk.	Check for possible cross-talk.
Segmentation (Extension) Faults		
80	Configuration error	Contact Wintriss Tech. Support.
81	Second segment error	Check all cable connections. Contact Wintriss Tech. Support.
82	Third segment error	Check all cable connections. Contact Wintriss Tech. Support.
83	Fourth segment error	Check all cable connections. Contact Wintriss Tech. Support.
85	Configuration error	Contact Wintriss Tech. Support.

Table 4-1. Shadow 8 Fault Codes (Cont.)

Fault Code	System Status	Corrective Action
86	Second segment firmware not compatible with first segment	Replace with compatible component or return system to Wintriss for upgrade.
87	Third segment firmware not compatible with first segment	Replace with compatible component or return system to Wintriss for upgrade.
88	Fourth segment firmware not compatible with first segment	Replace with compatible component or return system to Wintriss for upgrade.
90	Incorrect segment type in position two, three, or four	Confirm that all segments are of the same type, either all transmitters or all receivers.
91	Segment 2 type does not match segment 1 type	Confirm that segment 2 is the same type (transmitter or receiver) as segment 1.
92	Segment 3 type does not match segment 1 type	Confirm that segment 3 is the same type (transmitter or receiver) as segment 1.
93	Segment 4 type does not match segment 1 type	Confirm that segment 4 is the same type (transmitter or receiver) as segment 1.
95	Error in flex segment during operation	Check connections. Contact Wintriss Tech. Support.
96	Error in segment 2 during operation	Check connections to segment 2. Replace segment 2 with known good segment. Contact Wintriss Tech. Support.
97	Error in segment 3 during operation	Check connections to segment 3. Replace segment 3 with known good segment. Contact Wintriss Tech. Support.
98	Error in segment 4 during operation	Check connections to segment 4. Replace segment 4 with known good segment. Contact Wintriss Tech. Support.
100	Number of segments in system has been reduced	Segment count is less than original configuration. Add required segment(s) or program system for current configuration. See *Removing Extension Heads*, page 2-60.
101	Too many flex nodes in the flexbus	Make sure there are a total of only 4 segments.

Other Troubleshooting Steps

Machine Run/Stop LED Is Red and No Fault Code Displayed

If the Machine Run/Stop LED is illuminated red even when you turn the Program/Run/Start key switch to START, and the light curtains are unobstructed and no code is displayed on the Main Receiver IBIs, disable both programmable fixed blanking and floating blanking, power Shadow 8 down and then up, and realign the unit (see *Checking Alignment*, page 4-7).

In a multi-segment system, if the Machine Run/Stop LED on the Main Receiver is red, check the alignment of all Extensions and realign if necessary. Alternately illuminated IBIs indicate that the minimum number of consecutive beams for that pair of heads are not aligned (see Table 2-13, page 2-50). Single illuminated IBIs indicate misaligned LED/phototransistor pairs.

Machine Run/Stop LED Not Green

If the Machine Run/Stop LED on the Main Receiver is not illuminated green and there is no object in the light field, dirt on the lens window may be blocking a light beam. Try cleaning the lens window on both receiver and transmitter, referring to the instructions on page 4-7.

If, after cleaning the lens windows, the Machine Run/Stop LED is still not illuminated green, the next step is to bring the optic heads to within 12 in. of each other. (Do not position the heads closer than 12 in.) Unbolt either the receiver or transmitter, take the unbolted unit off its mounting, and hold it directly in front of the other head. You may need to disconnect wiring in order for the head to reach.

NOTICE

Power down the control before connecting or disconnecting the wires to the heads.

Make sure the lenses are pointed directly at one another and you have the Shadow 8 heads in the same plane.

If the Machine Run/Stop LED is illuminated green after you have brought the heads close together, there is a problem with your installation. Reread the mounting instructions starting on page 2-15 to be sure you understand how Shadow 8 heads should be mounted. When you adjust your brackets so they are in the same horizontal and vertical plane, the Shadow 8 transmitter and receiver should align.

If the Machine Run/Stop LED is not illuminated green after adjusting the mounting brackets, your Shadow 8s probably have an internal problem. Call Wintriss Tech. Support for assistance.

Machine Run/Stop LED Green but Press Won't Start

⚠ WARNING

GUARD AGAINST ELECTRIC SHOCK HAZARD

- Ensure that the power source is off before checking or replacing fuses.
- Turn off and disconnect power from the Shadow 8 safety light curtain and from the machinery it is connected to, including the machine control and motor, before making any wiring connections.
- Ensure that all procedures are performed by qualified personnel.

Failure to comply with these instructions could result in death or serious injury.

If the Machine Run/Stop LED is illuminated green, but you cannot start the press, check the stop relays on the Relay board on the optional Shadow 8 control box Main board (see Figure 2-20, page 2-32), following the instructions in *Checking and Replacing Control Relays in Optional Shadow 8 Control Box*, page 4-9.

Every Other IBI Lit

When alternate IBIs on Main or Extension heads are illuminated, the minimum number of consecutive beams that must be aligned is not being satisfied (see Table 2-13, page 2-50). Correct the misalignment, then turn the Program/Run/Start key to START.

Transmitter Status LED Is Flashing

When the Transmitter Status LED indicator is flashing, it indicates that the transmitter ground wire may not be connected to the ground stud within the Shadow 8 control box. Check the ground wire connection and correct if necessary. If this does not solve the problem, return the transmitter to Wintriss for repairs.

Machine Run/Stop and Blanking Active LEDs Flash Simultaneously

When the Machine Run/Stop LED flashes red and the Blanking Active LED flashes amber at the same time, the number of beams you are attempting to program in a fixed blanking window is preventing the required number of consecutive beams from remaining unobstructed (see Table 3-1, page 3-6). Turn the Program/Run/Start key to START to clear the error, then re-program the fixed blanking window, reducing the number of blanked beams.

Shadow 8 Control Box or WPC Power LED Dims and Blinks

If the Power LED on the Shadow 8 control box or WPC enclosure dims and blinks, a Receiver or Transmitter segment has shorted the 24 volt power internally. To determine the source of the problem, turn off power and unplug the Main Transmitter; then, turn the power back on. If the Power LED still dims and blinks, a Receiver segment is defective. If the Power LED behaves normally, a Transmitter is at fault.

If the problem is in a Receiver and there are no Extensions, the Main Receiver is defective. Return the unit to Wintriss for repairs. If there are Receiver Extensions, turn off power and disconnect the last Extension; then turn the power back on. If the Power LED behaves normally, the Receiver Extension you removed is defective. If the Power LED dims and blinks, another Extension is at fault. Continue removing Extension heads, one at a time, until you find the defective Receiver segment. Return the defective unit to Wintriss for repairs.

If the problem is in a Transmitter, follow the same process to isolate the defective Transmitter segment. Return the defective unit to Wintriss for repairs.

Checking and Cleaning Lens Windows

Sometimes dirt, oil, or another substance adheres to the plastic lens window on the optic heads, potentially blocking one or more light beams and inadvertently causing a press shutdown. If the Machine Run/Stop LED indicator is lit red when there are no objects in the light field and one or more Individual Beam Indicators are lit on the receiver, a dirty lens window may be the cause.

To clean the lens window, use a clean, particle-free cloth and a mild detergent or glass cleaner. Make sure you avoid excessive rubbing.

Checking Alignment

Shadow 8 can go out of alignment if the universal mounting brackets have been bent, if a unit has been struck by another piece of equipment (e.g., die cart, forklift, etc.), or if mounting bolts have loosened, allowing the units to move slightly. You may have an alignment problem if the Machine Run/Stop LED indicator is lit red when the light field is clear and one or more Individual Beam Indicators are lit on the receiver.

To check alignment, first loosen the universal mounting brackets at both ends of one of the optic heads. Rotate the head back and forth, watching the Machine Run/Stop LED indicator to see if it becomes illuminated green (see *Aligning and Tightening Down Shadow 8 Heads*, page 2-49).

If the Machine Run/Stop LED does not come on green, remove either the receiver or transmitter from its bracket, and move it to within 12 in. (304.8 mm) of the other unit. (Do not position the heads closer than 12 in.) Make sure that the connection to the control remains intact as you move one head closer to the other. Aim the head so it is pointing directly at the mating optic head, watching the Machine Run/Stop LED indicator. Shadows will always align at this close range if working properly. If the Machine Run/Stop LED comes on green, the optic heads may have been misaligned when anchored in their brackets. Check for the cause of misalignment and correct it.

To make sure that misalignment is the cause of a Machine Run/Stop LED indicator going red, place both units on a bench so that they are aligned and the Machine Run/Stop LED is lit green. Move one unit slowly away from the other, keeping the beams aligned. If the Machine Run/Stop LED comes on red as you move the heads apart, the problem may be a weak phototransistor or LED. Contact Wintriss Tech. Support immediately to discuss return of the unit.

When a phototransistor becomes weak, it can detect a light beam at close range but not at a distance. If an LED becomes weak, it cannot generate enough light to be detected by its corresponding phototransistor.

Checking and Replacing the AC Power Fuse in Optional Shadow 8 Control Box

⚠ WARNING

GUARD AGAINST ELECTRIC SHOCK HAZARD

- Ensure that the power source is off before checking or replacing fuses.
- Disconnect power from the machinery it is connected to before making any wiring connections. This includes disconnecting power to the machine control and motor.
- Ensure that all procedures are performed by qualified personnel.

Failure to comply with these instructions could result in death or serious injury.

Whenever Shadow 8 loses power, first check the AC power fuse, F1, on the optional Shadow 8 control Main board (see Figure 2-20, page 2-32). F1 is a time-lag fuse rated at 1.25 A @ 250 Vac.

1. Turn off power to Shadow 8.
2. Open the door of the control by turning the locking clasp.
3. Locate fuse F1 on the Main board to the left of the AC power connections.
4. Remove the fuse and test with an ohmmeter. Put the ohmmeter leads on each side of the fuse. No resistance (0 ohms) means the fuse is good.
5. If the fuse is bad, insert a new fuse into the Main board.
6. Close the door of the control and secure with the locking clasp.
7. Power up Shadow 8.

Checking and Replacing Control Relays in Optional Shadow 8 Control Box

⚠ DANGER

AVOID IMPROPER SAFETY RELAY REPAIR

Replace the Relay board on the optional Shadow 8 control Main board (see Figure 2-20, page 2-32) before placing the safety product back into operation after the occurrence of a failed relay.

If a relay fuses:

- DO NOT reset Shadow 8 to restart the machine.
- Remove Shadow 8 from operation immediately and replace the Relay board before operating the press again.

Failure to comply with these instructions will result in death or serious injury.

⚠ WARNING

GUARD AGAINST ELECTRIC SHOCK HAZARD WHEN WORKING INSIDE ENCLOSURE WITH POWER ON

- DO NOT touch electrical connections or circuit boards.
- Use test equipment only on the terminals specified in the instructions.
- Ensure that this test is performed by qualified personnel.

Failure to comply with these instructions could result in death or serious injury.

⚠ WARNING

GUARD AGAINST ELECTRIC SHOCK HAZARD WHEN CHANGING RELAYS

- Turn off and disconnect power from the Shadow 8 safety light curtain and from the machinery it is connected to before checking relays or replacing the Relay board, unless the test requires power to be on. This includes disconnecting power to the machine control and motor.
- Ensure that all tests and repairs are performed by qualified personnel.

Failure to comply with these instructions could result in death or serious injury.

If the stop relays in the optional Shadow 8 control are not working properly, you must first determine the cause of the problem.

If a relay malfunction prevents clearing of the Curtains Obstructed state (i.e., allowing the Machine Run/Stop LED to turn from red to green), the problem is most likely that the contacts on one or both of the relays are welded shut, or a relay coil will not energize to close the contacts. In either case, replace the Relay board as instructed on page 4-11.

If the relay contacts appear to be cycling (i.e., opening and closing) and the Machine Run/Stop LED is illuminated green, the problem is likely that a relay contact is pitted or burned, causing resistance at the contact to be so high that no current can flow through the contacts. Perform a resistance test (see page 4-10) to determine if the relays need to be replaced.

Performing a Resistance Test

If there is a problem with the relays but the light curtain is in an “Unobstructed” state (i.e., the Machine Run/Stop LED is illuminated green), perform a resistance test on the OSSD 1 and OSSD 2 relay contacts, using a DVOM (Digital Volt-Ohm Meter), as shown below. Replace the Relay board if you find a bad relay, following the instructions on page 4-11.

1. Turn off power to the Shadow 8 control.
2. Open the door of the Shadow 8 control box.

> **⚠ WARNING**
>
> **GUARD AGAINST ELECTRIC SHOCK HAZARD WHEN CHECKING RELAYS**
>
> - Turn off and disconnect power from the Shadow 8 safety light curtain and from the machinery it is connected to before checking relays, unless the test requires power to be on. This includes disconnecting power to the machine control and motor.
> - Ensure that all tests are performed by qualified personnel.
>
> **Failure to comply with these instructions could result in death or serious injury.**

3. Carefully remove the wires connected to terminal block TB4 on the Relay board, and cap them to avoid an electric shock and prevent a short circuit on the Shadow 8 board. See Figure 2-20, page 2-32 for the location of the Relay board on the Shadow 8 Main board.

> **NOTICE**
>
> Make a sketch of the existing wiring connections to consult when you rewire TB4 in step 8.

4. Turn on power to the Shadow 8 control, and verify that the light curtains are in an Unobstructed state (i.e., Machine Run/Stop LED is green).
5. With the DVOM set to “Ohms,” measure the resistance across the OSSD 1 N/O contacts, pins 1 and 2 on TB4. These pins are labelled “N.O. 1” on the Relay board. The resistance should be less than 5 ohms. If it isn’t, replace the Relay board (see next section).
6. Measure the resistance across the OSSD 2 N/O contacts, pins 3 and 4 on TB4 (labelled “N.O. 2”). If the resistance is not less than 5 ohms, replace the Relay board (see next section).
7. Obstruct the light curtain (Machine Run/Stop LED should be red), and measure the resistance across the OSSD 2 N/C contacts, pins 5 and 6 on TB4 (labelled “N.C.”). The resistance should be less than 5 ohms. If it isn’t, replace the Relay board (see next section).
8. Reconnect the wiring you removed in step 3.
9. If the relay contacts test out correctly, check the wiring going to TB4 and its voltage, if applicable, referring to the wiring diagrams at the back of the manual to determine your exact wiring configuration.

Replacing the Relay Board

⚠ DANGER

AVOID IMPROPER SAFETY RELAY REPAIR

Replace the Shadow 8 Relay board after the occurrence of a failed safety relay before placing the light curtain back into operation.

Failure to comply with these instructions will result in death or serious injury.

⚠ WARNING

GUARD AGAINST ELECTRIC SHOCK HAZARD WHEN WORKING INSIDE ENCLOSURE WITH POWER ON

- DO NOT touch electrical connections or circuit boards.
- Use test equipment only on the terminals specified in the instructions.
- Ensure that this test is performed by qualified personnel.

Failure to comply with these instructions could result in death or serious injury.

If one or both of the Shadow 8 safety relays fail, you should replace the entire Relay board (see Figure 2-20, page 2-32). You can order a new board from Wintriss Tech. Support. To replace the Relay board, do the following.

1. Turn off power to Shadow 8.
2. With one hand, push the two plastic clips holding the top of the board in place away from the edges of the board, then with the other hand grasp the top of the board firmly by its sides and pull it gently out of its socket. Remove the bottom of the board from its retaining clips by pushing the clips aside and pulling the board upward.
3. Plug the replacement board into the Relay board socket, and snap the plastic clips into place to secure the board.
4. Power Shadow 8 back up.

Checking for and Correcting Cross Talk

If the Machine Run/Stop LED indicator on the Main Receivers of two Shadow 8 units mounted close to one another (e.g., on adjacent presses) illuminates alternately green and red when there is no visible obstruction in the light field, “cross talk” may be the cause. Cross talk occurs when the LEDs in the transmitter of one unit are detected by the phototransistors in the receiver of the other unit.

To diagnose the problem, first try swapping the transmitter with the receiver on one of the sets. If the symptoms disappear, cross talk was the problem. You can also place an opaque barrier between the two sets, making sure that the barrier runs all the way from the transmitter to the receiver. If the symptoms disappear, cross talk was the problem.

To eliminate cross talk between two Shadow 8 units, refer to *Preventing Cross Talk between Two Sets of Shadow 8 Heads*, page 2-27.

Appendix A. Wiring Shadow 8 Heads Directly to WPC

You can wire Shadow 8 Main Transmitter and Receiver directly to a WPC 2000 or “new-style” WPC 1000 clutch/brake control designed especially for Shadow 8. This WPC unit has Program/Run/Start and Program Off/On key switches installed on the front of the enclosure (see Figure A-1 for switch label). Switches are pre-wired. However, you must connect the Start terminal on the Main Receiver to the Start contact on the Program/Run/Start key switch.

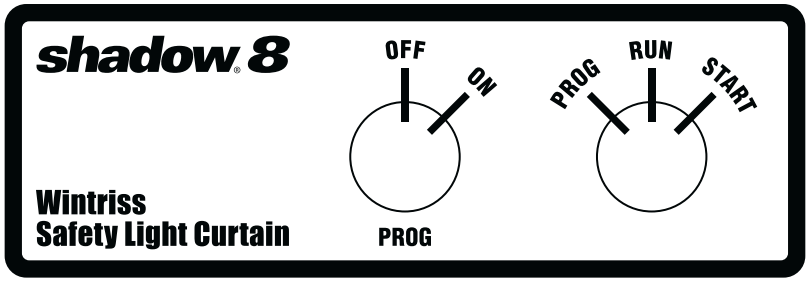

Figure A-1. WPC Label for Program Off/On and Program/Run/Start Key Switches

NOTICE

EXTERNAL DEVICE MONITORING (EDM) MUST BE DISABLED

You must disable External Device Monitoring (EDM) when connecting Shadow 8 directly to WPC.

Shadow 8’s External Device Monitoring (EDM) feature must be disabled, using Receiver switch 2, when connecting optic heads directly to WPC. Refer to page 2-47 for instructions.

To connect Shadow 8 Main heads to WPC, do the following:

⚠ WARNING

GUARD AGAINST ELECTRIC SHOCK HAZARD

- Ensure that the power source is off before you make any wiring connections.
- Turn off and disconnect power from the Shadow 8 safety light curtain and from the machinery it is connected to, including the machine control and motor, before making any wiring connections.
- Ensure that all procedures are performed by qualified personnel.

Failure to comply with these instructions could result in death or serious injury.

1. Make sure that Shadow 8 and WPC are powered down.
2. Determine how you will bring wiring from your Main heads to the WPC enclosure.
3. Run the wires through flexible liquid-tight conduit to the enclosure (see Figure A at the end of the manual for a drawing and parts list). Run WPC 2000 wiring to one of the knockouts in the lower right corner (center- or right-mounted unit) or lower left corner (left-mounted unit). Run WPC 1000 wiring to a knockout in the bottom center of the unit.

Because WPC is rated NEMA 12 (protected against dust and oil), you must use conduit of the same rating and make proper connections to ensure NEMA 12 protection.

4. Measure and cut Transmitter and Receiver wires so they reach the appropriate connectors on the WPC 2000 Main Processor board or WPC 1000 Control board.

   WPC 2000 wires must reach TB104 on a center- or right-mounted board; they must reach TB101 on a left-mounted board. WPC 1000 wires must reach both TB101 and TB102.

5. Remove enough black PVC insulation so the conductors are exposed from the knockout to the furthest terminal block they are required to reach.

   First, make a shallow incision with an Exacto knife around the circumference of the cable, then bend the insulation back and forth at the incision point and pull the insulation free.

6. Remove 3/16 to 1/4 in. of insulation from the end of each conductor, using a wire stripper.

7. Connect wires as shown in Table A-1 and in figures 11 (WPC 2000) and 12 (WPC 1000 New Style) at the end of the manual.

Table A-1. Shadow 8 Main Transmitter/Receiver Wiring Connections to WPC

Optic Head	Wire Color	Signal	WPC 2000 Pin #	WPC 1000 Pin #
Transmitter				
	Blue	0 Vdc	30 (TB103 Top)	28 (TB101 Bottom)
	Brown	24 Vdc	42 (TB104 Top)	47 (TB102 Bottom)
	White	MTS	Not used. Cut off unneeded wire.	
	Black	MTS Ret	Not used. Cut off unneeded wire.	
	Green	Earth	Terminate to ground stud near cable entry point	
Receiver				
	Blue	0 Vdc	30 (TB103 Top)	28 (TB101 Bottom)
	Brown	24 Vdc	42 (TB104 Top)	47 (TB102 Bottom)
	Red	EDM	30 (TB103 Top)	28 (TB101 Bottom)
	Black	OSSD 1	77 (TB103 Bottom)	8 (TB101 Top)
	White	OSSD 2	87 (TB104 Bottom)	21 (TB102 Top)
	Yellow	Start	Connect to Start (Yellow) wire from key switch	
	Pink	Aux Out	Not used. Cut off unneeded wire.	
	Green	Earth	Terminate to ground stud near cable entry point	

Connect the yellow Receiver wire to the yellow wire from the Program/Run/Start key switch, using the crimp-type wire nut provided. Simply twist together the exposed ends of both yellow wires, insert the wires in the wire nut, and secure the wires in the nut with a crimping tool.

Make sure to terminate green (Earth) wires on both Receiver and Transmitter to a ground stud inside the enclosure near the knockout through which you bring the wiring.

The pink Receiver wire and white and black Transmitter wires are not used. Cut these conductors off near the enclosure entry and bind them to the other wires with a tyrap.

Appendix B. Checkout Procedure Log

The following checkout procedure must be performed by qualified personnel during initial Shadow 8 system installation and at least every three months after that. Perform the procedure more frequently if machine usage and company guidelines require.

Machine Identification:_____Date:_____

Item	Condition	Comments
1. Verify that the guarded machine is a type that may be used with Shadow 8. See Requirements page at beginning of manual for further information.	❑ Pass ❑ Fail	
2. Verify that the mounting distance of Shadow 8 is equal to or greater than the minimum safe distance from the pinch point. See *Calculating the Safety Distance*, page 2-2.	❑ Pass ❑ Fail	
3. Determine that all access to the pinch point not protected by Shadow 8 is guarded by other means, such as gates, fencing or other approved methods. Verify that all additional guarding devices are installed and operating properly.	❑ Pass ❑ Fail	
4. Make sure that the operator is not able to stand between the Shadow 8 sensing field and the machine pinch point. Verify that the light curtain can only be reset from a position outside and within view of the hazardous machine area.	❑ Pass ❑ Fail	
5. Inspect the electrical connections between the guarded machine's control system and Shadow 8. Verify that they are properly connected to the machine such that a stop signal from Shadow 8 results in an immediate halt of the machine's cycle. See *Connecting Stop Circuits to the Control*, page 2-39.	❑ Pass ❑ Fail	
6. If the EDM monitoring feature in the optional Shadow 8 Control is not used, proceed to step 7. To test the EDM feature, verify that the feature has been enabled. Turn the machine power on. Cycle the machine. Make sure that the switch labelled "SW1 EDM" on the Main board in the optional control is set to the "EXT" position. Place a temporary jumper wire between the terminal labelled "EDM" on TB2 on the Shadow 8 Main board and the terminal labelled "0 VDC" on TB3. The IBIs on the Shadow 8 main receiver should display fault code 42. Remove the temporary jumper. Turn the Program/Run/Start key switch to the START position.	❑ Pass ❑ Fail	
7. Record the test results in the machine log, then perform the Test Procedure (see Appendix C).	❑ Pass ❑ Fail	

Technician Signature:_____

Appendix C. Test Procedure Log

The following test procedure must be performed by qualified personnel during initial Shadow 8 installation, according to the employer's regular inspection program, and after any maintenance, adjustment or modification to the Shadow 8 or the guarded machine. Testing ensures that the light curtain, safety system, and machine control system work together to properly stop the machine. Failure to test properly could result in serious injury to personnel. To test the Shadow 8, use a test object of the correct size.

Machine Identification:_____Date:_____

Item	Condition	Comments
1. Disable the guarded machine. Apply power to the Shadow 8.	❑ Pass ❑ Fail	
2. Visually inspect the machine to ensure that access to the pinch point is only through the Shadow 8 sensing field. If not, additional guarding, including mechanical barriers, may be required. Verify that all additional guarding devices and barriers are installed and operating properly.	❑ Pass ❑ Fail	
3. Verify that the mounting distance of the Shadow 8 is equal to or greater than the calculated minimum safety distance from the pinch point. See *Calculating the Safety Distance*, page 2-2. Ensure that the operator is not able to stand between the Shadow 8 sensing field and the pinch point.	❑ Pass ❑ Fail	
4. Check for signs of external damage to the Shadow 8, the machine and the electrical cables and wiring. If damage is found, lock the machine off and report to the supervisor.	❑ Pass ❑ Fail	
5. Interrupt the Shadow 8 sensing field with the proper size test object. Move the test object inside the perimeter (along the top, sides and bottom) of the sensing field and up and down through the center. At least one Individual Beam Indicator must be lit while the test object is anywhere in the sensing field. If in Automatic Start mode, verify that the Machine Run/Stop LED is illuminated red. If in Start/Restart Interlock mode, verify that the the Machine Run/Stop LED is illuminated red and the yellow Interlock/Alarm LED is lit. Turn the Program/Run/Start key switch to START before proceeding to step 6.	❑ Pass ❑ Fail	
6. Start the machine. While the machine is in motion, interrupt the sensing field with the test object. The machine should stop immediately. Never insert the test object into the dangerous parts of the machine. With the machine at rest, interrupt the sensing field with the test object. Verify that the machine will not start with the test object in the sensing field.	❑ Pass ❑ Fail	
7. Verify that the braking system is working properly. If the machine does not stop fast enough, adjust the braking system or increase the distance from the sensing field to the pinch point.	❑ Pass ❑ Fail	
8. If the safety devices or the machine fails any of these tests, do not run the machine. Immediately tag or LOCKOUT the machine to prevent its use and notify the supervisor.	❑ Pass ❑ Fail	

Technician Signature:_____

Appendix D. Extracts from OSHA Regulations and ANSI Standards

> ⚠ **WARNING**
>
> **REFER TO CURRENT REVISIONS OF OSHA/ANSI DOCUMENTS**
>
> The following extracts from OSHA and ANSI documents are provided for the user's convenience only. Refer to the most recent revisions of the original OSHA safety regulations and ANSI standards to ensure that you have the most up-to-date information.
>
> **Failure to comply with these instructions could result in death or serious injury.**

This appendix provides extracts from the Occupational Safety and Health Administration (OSHA) regulations and the American National Standards Institute (ANSI) standards covering presence-sensing devices.

Extracts from OSHA Regulation 1910.217

> ⚠ **WARNING**
>
> **REFER TO CURRENT REVISIONS OF OSHA/ANSI DOCUMENTS**
>
> The following extracts from OSHA and ANSI documents are provided for the user's convenience only. Refer to the most recent revisions of the original OSHA safety regulations and ANSI standards to ensure that you have the most up-to-date information.
>
> **Failure to comply with these instructions could result in death or serious injury.**

Reprinted below are extracts from OSHA regulation 1910.217 pertaining to the use of presence-sensing devices for point-of-operation guarding on mechanical power presses. Also reprinted here are interpretations of selected regulations provided by the Precision Metalforming Association (PMA). Extracts from the OSHA regulation are printed in the left-hand column; interpretations by PMA are shown in the right-hand column.

Wintriss makes no claim for the accuracy or effectiveness of the PMA interpretations, and persons making use of this material do so at their own risk. PMA interpretations should not be relied upon for use in any specific application. The material is provided, with PMA's permission, for informational purposes only.

Refer to the most recent versions of OSHA documents. To obtain copies of OSHA regulations, write to: OSHA's Office of Information and Consumer Affairs, 200 Constitution Avenue NW, Room N3647, Washington, DC 20210. Tel (202) 219-8151; fax (202) 219-5986.

Extracts from OSHA Regulation 1910.217

OSHA Regulations	PMA Interpretation
OSHA 1910.217 (c).	TABLE 0-10
(c) SAFEGUARDING THE POINT OF OPERATION. –	*Distance of opening from point of operation hazard (inches)* — *Maximum width of opening (inches)*
(1) General requirements.	
(i) It shall be the responsibility of the employer to provide and insure the usage of “point of operation guards” or properly applied and adjusted point of operation devices on every operation performed on a mechanical power press. See Table 0-10.	*1/2 to 1 1/2 . . . . . 1/4* *1 1/2 to 2 1/2 . . . . . 3/8* *2 1/2 to 3 1/2 . . . . . 1/2* *3 1/2 to 5 1/2 . . . . . 5/8* *5 1/2 to 6 1/2 . . . . . 3/4* *6 1/2 to 7 1/2 . . . . . 7/8* *7 1/2 to 12 1/2 . . . . . 1 1/4* *12 1/2 to 15 1/2 . . . . . 1 1/2* *15 1/2 to 17 1/2 . . . . . 1 7/8* *17 1/2 to 31 1/2 . . . . . 2 1/8*
OSHA 1910.217 (c) (3) (i) (a)	
(3) Point of operation devices.	*Presence-sensing device*
(i) Point of operation devices shall protect the operator by:	
(a) Preventing and/or stopping normal stroking of the press if the operator’s hands are inadvertently placed in the point of operation.	*(c) (3) (i) (a) Refers to the functional requirement of a presence-sensing device which prevents and/or stops normal stroking of the press*
OSHA 1910.217 (c) (3) (iii)	
(iii) A presence-sensing point of operation device shall protect the operator as provided in paragraph (c) (3) (i) (a) of this section, and shall be interlocked into the control circuit to prevent or stop slide motion if the operator’s hand or other part of his body is within the sensing field of the device during the downstroke of the press slide.	.
(a) The device may not be used on machines using full revolution clutches.	
(b) The device may not be used as a tripping means to initiate slide motion.	*European method (curtain of light) uses self trip safety system effectively. Variance applied for 11/17/73 by Interlake Stamping Company to use this fail safe system.*
(c) The device shall be constructed so that a failure within the system does not prevent the normal stopping action from being applied to the press when required, but does prevent the initiation of a successive stroke until the failure is corrected. The failure shall be indicated by the system.	*When failure occurs, the best indication is the press won’t run.*

Extracts from OSHA Regulation 1910.217

OSHA Regulations	PMA Interpretation
(d) Muting (bypassing of the protective function) of such device, during the upstroke of the press slide, is permitted for the purpose of parts ejection, circuit checking and feeding.	*Top of stroke is the point at which muting shall cease as it is not possible to set a point on the downstroke as the exact position where the hazard of die closing starts.*
(e) The safety distance (Ds) from the sensing field to the point of operation shall be greater than the distance determined by the following formula: Ds = 63 inches/second x Ts, where Ds = minimum safety distance (inches); 63 inches/second = hand speed constant; and Ts = stopping time of the press measured at approximately 90° position of crankshaft rotation (seconds).	*Safety distance represents the distance an operator can move his hand during the time it takes a press to stop. The internationally recognized hand reach speed is 63 inches/ second.* *To determine this safety distance, the stopping time of the press is measured with some appropriate measuring device. The measurement is taken such that the stop signal is given to the press at the 90 degree point of the crank position.* *Since some stopping time increase must be accommodated due to braking system deterioration, a percentage factor must be added to the measured time to obtain the factor for use in the equation for determining safety distance. A percentage factor of 20% is recommended for presses with new brakes or brakes of good condition. For older brakes, a 10% factor is recommended.* *Example:* *Measured stopping time = 0.190 seconds* *Time factor = 1.2 x 0.19 = 0.228 seconds* *Calculation = 63 x 0.228* *Safety distance = 14.4 inches*
(f) Guards shall be used to protect all areas of entry to the point of operation not protected by the presence-sensing device.	*(3) (iii) (f) Great care must be taken to assure that no access to the die area exists unguarded.*
OSHA 1910.217 (c) (3) (5) (5) Additional requirements for safe-guarding. Where the operator feeds or removes parts by placing one or both hands in the point of operation, and a two hand control, presence-sensing device, Type B gate or movable barrier (on a part revolving clutch) is used for safeguarding:	*This paragraph tells the condition under which a brake monitoring system is required after November 1, 1975.*
(i) The employer shall use a control system and brake monitor which comply with paragraphs (b) (13) and (14) of this section. This requirement should be complied with by November 1, 1975.	*(b) (13) Control reliability* *(b) (14) Construction requirements.*

Extracts from OSHA Regulation 1910.217

OSHA Regulations	PMA Interpretation
OSHA 1910.217 (c) (3) (vii) (c)	
(c) The safety distance (Ds) between each two hand control device and the point of operation shall be greater than the distance determined by the following formula:	
Ds = 63 inches/second x Ts, where Ds = minimum safety distance (inches); 63 inches/second = hand speed constant; and Ts = stopping time of the press measured at approximately 90° position of crankshaft rotation (seconds).	*Example:* *Measured stopping time = 0.190 seconds* *Time factor = 1.2 x 0.19 = 0.228 seconds* *Calculation = 63 x 0.228* *Safety distance = 14.4 inches*
OSHA 1910.217 (e) (1)	
(e) INSPECTION, MAINTENANCE, AND MODIFICATION OF PRESSES	
(i) It shall be the responsibility of the employer to establish and follow a program of periodic and regular inspections of his power presses to insure that all their parts, auxiliary equipment, and safeguards are in safe operating condition and adjustment. The employer shall maintain records of these inspections and the maintenance work performed.	*Records of clutch and brake will be weekly. Other inspections are periodic subject to time factor determined by employer.*
(ii) Each press shall be inspected and tested no less than weekly to determine the condition of the clutch/brake mechanism, anti-repeat feature and single stroke mechanism. Necessary maintenance or repair or both shall be performed and completed before the press is operated. The employer shall maintain records of these inspections and the maintenance work performed. These requirements do not apply to those presses which comply with paragraphs (b) (13) and (14) of this section.	*If brake monitoring system is installed, weekly inspection and records are not required for clutch/brake mechanism. Other parts of the press will require periodic inspections and records.*

Extracts from ANSI Standards for Presence-sensing Devices

⚠ WARNING

REFER TO CURRENT REVISIONS OF OSHA/ANSI DOCUMENTS

The following extracts from OSHA and ANSI documents are provided for the user's convenience only. Refer to the most recent revisions of the original OSHA safety regulations and ANSI standards to ensure that you have the most up-to-date information.

Failure to comply with these instructions could result in death or serious injury.

Reprinted below are the American National Standards Institute (ANSI) standards for presence-sensing devices (light curtains). ANSI, a national federation of trade associations, technical societies, professional groups, and consumer organizations, is the United States clearinghouse and coordinating body for voluntary standards activity. Approximately 1000 companies are affiliated with the Institute as company members.

ANSI creates voluntary standards to eliminate duplication and to weld conflicting standards into single, nationally accepted standards under the designation "American National Standards." The standards reflect a national consensus of manufacturers, consumers, scientific, technical, and professional organizations, and governmental agencies.

Shown below are extracts of standards requirements and explanatory information from ANSI B11.1-2009 and B11.19-2003 for presence-sensing devices (light curtains). Complete versions of these documents can be obtained by writing to: ANSI, 1430 Broadway, New York, NY 10018.

Extracts from ANSI B11.1-2009 8.6.2.1

Standards Requirements	Explanatory Information
8.6.2.1.7 Each operator's hand controls shall be located at a distance from the point-of-operation so that the operator(s) cannot release either hand actuating control and reach into the point-of-operation during the hazardous portion of the cycle.	***E8.6.2.1.7*** The total stopping time of the press should include the total response time of the control system and the time it takes hazardous motion to stop. The following formula should be used when calculating the safety distance (*Ds*): Ds = K (Ts + Tc + Tbm) Where: *K* = 63 inches/second (hand speed constant). *Ts* = the stop time of the press measured from the final de-energized control element, usually the air valve. *Tc* = the response time of the control. *Tbm* = the additional time allowed by the stopping-performance monitor (brake monitor) before it detects stop time deterioration. NOTE – *Ts* + *Tc* are usually measured by a stop time measuring device. When the press stopping-performance monitor setting is changed, the safety distance should be recalculated. See also Annex C.

Extracts from ANSI B11.1-2009 8.6.3

Standards Requirements	Explanatory Information
8.6.3 Presence-sensing safeguarding device	
8.6.3.1 A presence-sensing device, when used for safeguarding, shall protect the operator as specified in E8.6.1 (a).	***E8.6.3.1*** Various presence-sensing devices employ different sensing and adjustment techniques. The point at which a device responds to an intrusion can vary. Safety mats and area scanners may not be suitable (effective) safeguards when utilized as primary point-of-operation safeguarding. Factors which can affect this suitability include but are not limited to: a) response time; b) minimum object sensitivity; c) measurement accuracy; d) breach ability; e) penetration before detection; f) single point of failure; g) large safety distances. These devices may be utilized as supplemental safeguarding.
8.6.3.2 The device shall be interfaced with the control circuit to prevent or stop slide motion if any object is within the sensing field of the device during the hazardous portion of the cycle.	***E8.6.3.2*** The device should be located or adjusted so that the device always responds to the intrusion at or prior to the safety distance *Ds*. Also, care should be taken when installing the device so that it does not detect false signals from other devices or equipment in the area. The presence-sensing device cannot protect against a catastrophic failure of the press, which causes unintended cycling action. See Annex A, Figure A.3.
8.6.3.3 The device shall not be used for safeguarding the point-of-operation on presses using full-revolution clutches.	
8.6.3.4 When the sensing field has been interrupted, use of the normal press cycle-actuating means shall be required after clearing the sensing field to resume press operation.	
8.6.3.5 When the device is used in the PSDI mode, re-initiation of the press motion shall be in accordance with 6.4.3.8.1.	
8.6.3.6 Muting of the device shall be permitted only during the non-hazardous portion of the press cycle.	***E8.6.3.6*** Muting is typically accomplished by interface circuits or auxiliary controls. The die closing portion of the cycle is always considered hazardous. In some cases, feeding and transfer automation or die features can cause additional hazardous conditions even during the opening portion of the cycle (upstroke). See also ANSI B11.19 for additional information.

Extracts from ANSI B11.1-2009 8.6.3

Standards Requirements	Explanatory Information
8.6.3.7 Muting of the device shall be accomplished in a manner that conforms to the requirements of 6.11 and 8.8.	***E8.6.3.7*** Muting is typically accomplished by interface circuits or auxiliary controls. The muting element should incorporate a similar level of control reliability as the presence-sensing device itself. A simple cam-operated limit switch wired in parallel with the device's output is inadequate, as its failure can remain undetected.
8.6.3.8 The device shall have an identifiable minimum object sensitivity so that an obstruction of an equal or greater size will be detected anywhere within the sensing field regardless of the plane of intrusion.	***E8.6.3.8*** The device should have a minimum object sensitivity stated by the device supplier. For example, an electro-optical device may detect a 32 mm (1¼ inch) diameter opaque object anywhere in its sensing field but allow 25 mm (1 inch) obstructions to pass undetected at certain points in the field.
8.6.3.9 The device shall have a maximum response time, which shall not be affected by object sensitivity adjustments or environmental changes.	***E8.6.3.9*** The device supplier should state the maximum total response time, including output devices, of the presence-sensing device.
8.6.3.10 Devices which require adjustments to accommodate variations in operating conditions, or which incorporate fixed blanking or floating blanking features, shall be designed so that the adjustments or features are capable of supervisory control by the user.	***E8.6.3.10*** Typically, these adjustments or controls are key-operated or located under lockable covers.
8.6.3.11 The device shall be provided with a means that visibly indicates when it is functioning properly.	***E8.6.3.11*** Red and green indicators or other means that can be easily seen by the operator and others should be provided to indicate that the device is functioning.
Indication that the sensing field is being blanked shall be provided. For fixed blanking, the blanked area shall be identified. Supplemental safeguarding shall be provided to prevent access to the hazard through the fixed blanked area.	The blanking function of a presence-sensing safeguarding device desensitizes a portion of the sensing field by disabling one or more channels such that a specific interruption is ignored. Presence-sensing devices can be provided with either fixed or floating blanking. For fixed blanking, the desensitized area does not move or change once configured. Floating blanking allows the blanked area to move within the sensing field. Means to identify the desensitized area may include but are not limited to: a) Indicators within the device; b) Signage or marking of the fixed blanked area; c) The physical location of the object in the blanked area if movement or removal of the object can be detected and it results in a stop command.

Extracts from ANSI B11.1-2009 8.6.3

Standards Requirements	Explanatory Information
8.6.3.11 (cont)	Means of supplemental safeguarding can include completely filling the fixed blanked area to restrict access to the hazard, installing the device at a distance that accounts for the worse case object sensitivity (see 8.6.3.16), or alternate safeguarding may be provided to prevent access to the hazard.
If means are provided to bypass the device, visible indication that the device is bypassed shall be provided.	Means to provide visible indication may include but are not limited to: a) colored indicator lights; b) signage; c) physical position; d) awareness barrier (i.e., safety tape); e) other means.
8.6.3.12 The device shall not fail to respond to the presence of the individual's hand or other body part due to the presence of a reflective object or workpiece.	
8.6.3.13 The device shall conform to the requirements of 6.11 and 8.8. In the event of a power failure to the device, the device shall initiate a stop command to the press control system.	
8.6.3.14 The interface of the presence-sensing device to the press control shall conform to the requirements of 6.11 and 8.8.	
8.6.3.15 The sensitivity of the device to intrusion shall not be adversely affected by changing conditions around the press.	
8.6.3.16 The effective sensing field of the device shall be located at distance from the nearest point-of-operation hazard so that individuals cannot reach into the point-of-operation with a hand or other body part before cessation of motion during the hazardous portion of the cycle.	***E8.6.3.16*** The total stopping time of the press should include the total response time of the presence-sensing device, as stated by the supplier, the response time of the interface, the response time of the control system, and the time it takes the press to cease slide motion. The following formula should be used when calculating the safety distance: Ds = K (Ts + Tc + Tr + Tbm) + Dpf where *K* = 63 inches/second (hand speed constant) *Ts* = the stop time of the press measured from the final de-energized control element, usually the air valve *Tc* = the response time of the press control *Tr* = the response time of the presence-sensing device and its interface, if any, as stated by the supplier or measured by the user.

Extracts from ANSI B11.1-2009 8.6.3

Standards Requirements	Explanatory Information
8.6.3.16 (cont)	*Tbm* = the additional stopping time allowed by the stopping-performance monitor before it detects stop time deterioration. *Dpf* = the added distance due to the penetration factor as recommended in ANSI B11.19, Annex D, Figure D.2. The minimum object sensitivity is stated by the supplier. If beam blankouts or floating window features are used, these figures should be added to the object sensitivity figure before using the chart. NOTE - *Ts* + *Tc* is usually measured by a stop time measuring device. See also ANSI B11.19, Annex C and D. Whenever the press-cycle STOP command or stopping-performance monitor time or angle setting is changed, the safety distance should be recalculated. See also “stopping-performance monitor” (6.12). NOTE – No increase in safety distance is required for fixed blanking applications if the blanked area is entirely occupied by the material or fixtures. In some instances, the use of blanking does not allow efficient production of certain piece parts. Horizontal placement of the sensing field, so that it detects that operator’s waist area, may present a solution. In this application, the operator may freely manipulate the workpiece and operate the press as long as the operator stands outside of the horizontal sensing field. The sensing field should be located so that the operator cannot reach the point-of-operation prior to interrupting the sensing field and completion of the stopping action. Where possible, the sensing field should be of sufficient depth to prevent the operator from standing between the field and the point-of-operation. See also ANSI B11.19, Annex C and D.

Extracts from ANSI B11.1-2009 8.6.3

Standards Requirements	Explanatory Information
8.6.3.17 If the position of the device will allow the operator or others to place themselves between the sensing field and the point-of-operation, additional means shall be provided in conjunction with the device to prevent the operator or others from exposure to the point-of-operation hazard.	***E8.6.3.17*** Additional means may include manual reset outside of the sensing field of the device or additional barrier guards, safety mats, light curtains, or other devices. Operator controls for each operator located outside of the sensing field of the presence-sensing device may be used. As an alternative to the reset control and to prevent an individual from stepping behind the sensing field of a PSD, the maximum distance between the light curtain and the machine structure should not exceed 75mm (3 inches). Supplemental safeguarding may be utilized to eliminate a space greater than 75mm.
8.6.3.18 The device shall not be affected by ambient light or by light-source decay so that the increase in response time or object sensitivity is greater than the value used to calculate the safety distance.	***E8.6.3.18*** Examples of ambient light are associated with windows, light fixtures, skylights, bay doors, or die lights.
8.6.3.19 All areas of entry to the point-of-operation not protected by the presence-sensing device shall be otherwise safeguarded.	***E8.6.3.19*** Usually the electro-optical presence-sensing devise is used in a manner that provides a protected zone in front of the primary work area with auxiliary devices or guards used to protect secondary access areas. In some cases, mirrors may be used in conjunction with the device to provide two-, three- or four-sided protection.
8.6.3.20 Press production systems with a configuration that would allow an individual to enter, pass through, and become clear of the presence-sensing device sensing field shall not be operated in the PSDI mode of operation.	***E8.6.3.20*** For PSDI applications see Clause 10.
8.6.3.21 When a device is used on a press production system and the protection of the operator is dependent upon the stopping action of the press, a stopping-performance monitor shall be required in conformance with 6.12. See section 8.3.9 for exceptions.	

Extracts from ANSI B11.19-2003 8.3

Standards Requirements	Explanatory Information
8.3 Electro-optical, RF, and area scanning presence-sensing safeguarding devices	
8.3.1 Design and construction	
8.3.1.1 The presence-sensing device shall be designed and constructed to create a field that detects the presence of an individual(s).	**E8.3.1.1** The device should be designed and constructed such that it does not present hazards to individuals from:
The presence-sensing device shall not create a hazard in and of itself.	sharp edge or pinch point hazards; radiated light or energy hazards; electromagnetic interference hazards; electrical shock hazards.
8.3.1.2 The electro-optical presence-sensing device shall have a minimum object sensitivity such that an obstruction of a same or greater size will always be detected anywhere within its sensing field, regardless of the plane of intrusion.	**EB.3.1.2** The presence-sensing device should have a minimum object sensitivity stated by the supplier. For example, an electro-optical device may detect an opaque object with a diameter of 32 mm (1-1/4 inch) anywhere in its sensing field, but allow an obstruction with a diameter of 25 mm (1 inch) to pass undetected at certain points in the field.
8.3.1.3 The device shall not fail to change its output state, if not muted, when it detects the presence of an individual.	**EB.3.1.3** Muting may be accomplished by the device, its interface, auxiliary controls, or the machine control system. When the device provides the muting, its output may or may not change state.
8.3.1.4 Adjustment or configuration of presence-sensing devices shall be capable of being supervised by the user.	**EB.3.1.4** Methods of meeting this requirement include, but are not limited to, the use of key operated controls or controls located under lockable covers. Adjustments or configuration can include, but are not limited to: muting; blanking; power adjustments; sensing field configuration; reset functions.
8.3.1.5 The presence-sensing device shall incorporate visual means to indicate that the device is detecting an individual within the effective sensing field of the device.	**EB.3.1.5** Indicators (usually red and green), displays or meters should be provided to indicate the status of the device. The visual means may be integral to the device or part of the interface or machine control system. Due to the prevalence of color blindness, methods such as unambiguous positioning, patterning, labeling or flashing of the indicators may be effective in providing the indication required.

Extracts from ANSI B11.19-2003 8.3

Standards Requirements	Explanatory Information
8.3.1.6 The presence-sensing device shall have a maximum response time that shall not be affected by object sensitivity or environmental changes. The safeguarding supplier shall provide the maximum response time of the presence-sensing device.	
8.3.1.7 The RF (radio frequency) presence-sensing device shall provide means to adjust the sensitivity of the field. The field, once adjusted, shall not decrease in sensitivity below this established level.	
8.3.1.8 The electro-optical device shall not be affected by ambient light conditions or by changes in the device light source characteristics, such that an increase in response time or object sensitivity occurs.	**EB.3.1.8** When the electro-optical device is exposed to signals from other electro-optical devices or to changes in ambient light commonly associated with windows, light fixtures, skylights, bay doors or work area lights, the response time or object sensitivity should not be adversely affected.
8.3.1.9 Components, subassemblies or modules of electro-optical, RF, and area scanning presence-sensing safeguarding devices shall be designed and constructed to meet the requirements of 6.1.	
8.3.1.10 The area scanning device shall provide a means or operating mode to verify the size, shape, and detection capabilities of the detection area or zone. Information shall be provided by the area scanning device supplier to identify the: a) maximum safeguarding range; b) minimum object sensitivity within the stated safeguarding range; c) maximum field of view in degrees; d) tolerance in the range measurement; and e) detection capabilities with respect to the reflectivity of an object versus the distance to the object.	**EB.3.1.10** These devices typically operate on the principle of “diffuse reflectance," which is a principle of transmitting beam(s) of light to form a detection area or zone. When an object enters the detection area, it reflects the transmitted light back to the device, which then evaluates the object's position. The amount of reflected light (degree of reflectance in percent) that can be reliably detected typically ranges from 1.8% to over 90% and can be represented graphically by reflectivity versus distance. For more information, see IEC 61496, parts 1 and 3.

Extracts from ANSI B11.19-2003 8.3

Standards Requirements	Explanatory Information
8.3.2 Installation, operation and maintenance	
8.3.2.1 Exposure to the hazard(s) shall not be possible by reaching over, under or around the sensing field of the device. Additional guards or safeguarding devices shall be provided to protect those areas.	**EB.3.2.1** The user should select a presence-sensing device adequate to prevent individuals from reaching over, under or around the sensing field during the hazardous portion of the machine cycle. Additional safeguarding may be required in conjunction with the device to meet this requirement.
The effective sensing field shall be of adequate height, width, and depth so that entry of the individual into the hazard area is detected.	If individuals can place themselves between the sensing field and the hazard area, additional safeguarding should be used in conjunction with the device to prevent the individual from exposure to the hazard. When an individual can pass through the sensing field, see the requirements of 8.3.2.3. The electro-optical presence-sensing device may fail to detect an individual's presence due to reflective workpieces or objects in the vicinity of the device. Care should be used to ensure that these reflections do not render the device ineffective. Some examples of reflective objects include, but are not limited to: machine surfaces; tooling; work pieces; hand tools; auxiliary equipment; workholding tables and fixtures. Testing each set-up for minimum object sensitivity should be done with an appropriate test rod, following the supplier's recommendation. Where objects are placed within the defined sensing field of an area optical laser scanner, care should be taken to ensure that: a) No shadows exist behind the objects such that the device is rendered ineffective; b) Removal of the object will not allow undetected access to a hazard area.

Extracts from ANSI B11.19-2003 8.3

Standards Requirements	Explanatory Information
The device shall be installed such that it does not create additional hazards.	Some installation hazards include, but are not limited to: pinch point hazards created by interference between the device and moving members of the machine; tripping hazards; electrical shock hazards; overhead or other "strike against" hazards; thermal hazards. Where such conditions can exist, additional safeguarding may be required.
8.3.2.2 The presence-sensing device shall be installed at a location so that the effective sensing field prevents individuals from reaching the hazard(s) during the hazardous portion of the machine cycle.	**EB.3.2.2** The safety distance calculation is dependent upon the: total response time of the device as stated by the safeguarding supplier; response time of the interface; response time of the control system; time it takes the machine to stop hazardous motion; and depth penetration factor of the device. See Annex D for the formula(e) to calculate the safety distance. Radio frequency devices have sensing fields that can vary due to: antenna(e) design; effects of adjacent machinery and equipment; field sensitivity adjustments; and environmental factors (such as humidity or temperature). Before the machine is used for production purposes, the RF device should be checked to ensure that the effective field protects individuals at the safety distance.
8.3.2.3 The presence-sensing device shall protect individuals from hazards by initiating an immediate stop command to the machine control system when the sensing field of the device is interrupted during the hazardous portion of the machine cycle. It shall require re-initiation of the normal actuating means prior to the start or continuation of motion of the machine.	**EB.3.2.3**
When an individual can pass through the sensing field of the presence-sensing device, the device shall initiate an immediate stop command to the machine control system and shall require that the device or machine control be manually reset before hazardous motion can occur.	The operator should ensure that no individual is in the safeguarded area before re-setting the device or machine control and initiating hazardous motion.

Extracts from ANSI B11.19-2003 8.3

Standards Requirements	Explanatory Information
The reset device shall be located outside of the safeguarded area such that it cannot be reached from within the safeguarded area. Reset of the device or machine control shall not occur until verification that the safeguarded area is clear of individuals.	Key lock reset switches located at various positions around the safeguarded area may be one method of accomplishing this requirement.
8.3.2.4 Components, subassemblies or modules of the interface or machine control system shall meet the requirements of 6.1.	
8.3.2.5 Muting of the device shall be permitted during the non-hazardous portion of the machine cycle. Muting of the device shall be accomplished such that a single failure of a component, a subassembly or a module of the system / device that affects the performance of the safety-related functions shall not prevent a normal stop command from being initiated, or shall cause an immediate stop command. In the event of a failure, re-initiation of the machine shall be prevented until the failure is corrected or the system or device is manually reset.	**EB.3.2.5** Muting is typically accomplished by interface circuits or auxiliary controls. The muting element should incorporate a similar level of control reliability as the presence-sensing device itself. A simple cam-operated limit switch wired in parallel with the device's output is inadequate, as its failure can remain undetected.
In the presence of a failure, repetitive manual reset of the system or device shall not be used for production.	The intention of a manual reset is to encourage the diagnosis of a failed component, subassembly, device or module. A second failure may occur during the diagnostic or troubleshooting process, negating the safety function(s). Additional safeguarding should be used to protect individuals during this process. See the definition for control reliability and Annex C for further information.
If the machine has reversing capability where a muting hazard is possible, the control system shall include an automatic means so muting is only permitted in the forward direction. If an individual can pass through a sensing field when the device is muted, means shall be provided to ensure that the individual is outside of the hazard area, or that the machine ceases hazardous motion when the muting is removed.	One method of meeting this requirement is by the use of a control circuit interlock on the drive motor starter (forward direction contact) to allow "muting" only in the forward direction when the starter is energized. See 8.3.2.1.
8.3.2.6 Bypassing of the device shall be capable of being supervised by the user. Indication that the device is active or bypassed shall be provided and shall be readily observable by individuals protected by the device.	**EB.3.2.6** Care should be taken to ensure that the operators and other individuals are aware that the device has been bypassed so that individuals do not assume that the device is active and they are safeguarded when, in fact, the device is bypassed.
When bypassed, the device, interface or control system shall not indicate any state other than "bypass."	An amber indicator lamp or other means may be used to meet this requirement.

Extracts from ANSI B11.19-2003 8.3

Standards Requirements	Explanatory Information
When the device is bypassed, other safeguarding must be provided and used.	When bypassed, the device's normal status indicators can be misleading if still active. One method that may be used to meet this requirement is to remove power to the device or to disable the normal status indicators when it is bypassed or not being used. Due to the prevalence of color blindness, methods such as unambiguous positioning, patterning, labeling or flashing of the indicators may be effective in providing the indication required.
8.3.2.7 The radio frequency device shall not be adversely affected by changes around the machine that may alter the sensitivity of the device such that individuals are no longer detected in the sensing field at the proper safety distance.	**EB.3.2.7** The radio frequency device may be affected by changes in the conditions around the machine such as ambient conditions, the placement of parts and tote boxes, grounding conditions of the operator, or the movement of industrial trucks. These changes should not adversely affect the performance of the device.
8.3.2.8 The total tolerance in the range measurement of an area scanning device shall be included in determining the distance from the nearest recognized hazard to the detection area or zone. This detection area shall be identified and tested to ensure that the device is able to detect individuals entering the detection area. The effective sensing field shall be verified for proper size and coverage upon installation, replacement, or changes of the detection area.	**EB.3.2.8** When the device is horizontally mounted, the detection area or zone should be visibly marked on the floor. This verification can be accomplished by using a programming device or by physically identifying the perimeter of the detection area with an appropriate test rod, following the supplier's recommendation. This verification is to ensure that a pre-programmed device with a small or improper detection area is not used by mistake in an installation requiring a larger field. Area scanners may not be suitable (effective) safeguards when used to protect an individual's hands or fingers from hazards. Items which can affect this suitability are: response time; minimum object sensitivity; measurement accuracy.

Extracts from ANSI B11.19-2003 Annex D

Annex D - Safety Distance (Informative)

The safeguarding devices listed below do not prevent an individual from reaching into a hazard area. In order for these devices to be effective, they must either prevent the start of, or stop hazardous motion (or situation) when an individual is exposed to the hazard. For the devices to accomplish this requirement, they must be located at a distance from the hazard such that hazardous motion (or situation) is prevented, completed or stopped before the individual can be harmed.

Devices that require location at a safety distance include, but are not limited to:

1) interlocked barrier guards;
2) two hand control devices;
3) two hand trip devices;
4) single control safeguarding devices;
5) electro-optical presence-sensing devices;
6) RF presence-sensing devices;
7) safety mat devices;
8) safety edge devices.

The first four devices protect individuals by positioning the individual at or beyond the safety distance before hazardous motion can be initiated, or by maintaining the individual's position at the safety distance after hazardous motion has been initiated. The remaining four devices protect individuals by detecting an individual entering (or their presence within) a hazard area at or within the safety distance.

NOTE - Barrier guards and movable barrier devices with various openings are located at a position away from the hazard area based on the ability of the operator to reach through the opening. Figure D.10 (and Table D.1) is one method that may be used to locate barrier guards.

The safety distance may be calculated using the following equation:

$Ds = K(T)$ Equation (1)

Where: Ds = the safety distance

K = the maximum speed that an individual can approach the hazard

T = the total time to stop hazardous motion which includes various factors as described below

The factor K is the speed constant and includes hand and body movements of an individual approaching a hazard area. The following factors should be considered when determining K:

a) Hand and arm movement;
b) Twisting of the body or shoulder, or bending at the waist;
c) Walking or running.

One of the accepted values for K is the hand speed constant (it is usually considered as the horizontal motion of the hand and arm while seated). Its common value is 1.6 m/s (63 in/s) although other values (typically greater) are also used. The hand speed constant does not include other body movements, which can affect the actual approach speed. Consideration of the above factors should be included when determining the speed constant for a given application.

The factor T is the total time that it takes for the hazardous motion to stop, or for the hazardous portion of the machine cycle to be completed. A power press may present a hazard during the closing portion of its cycle or a machining center may present a hazard during a tool change or while the tool is approaching the workpiece (trapping zone), but not present a hazard during the balance of the machine cycle.

T includes portions of time that vary by machine type and by the safeguarding device applied. The following affect the total stopping time:

a) Type of actuator;
   i. Full revolution clutch, or machines that cannot be stopped during a machine cycle. See note 1.
   ii. Part revolution friction clutch, or machines that can be stopped at any point in the machine cycle or anywhere during the hazardous portion of the machine cycle. See note 2.
   iii. Braking mechanism. See note 3.
   iv. Stopping capability of the motors and drive. See note 4.
   v. Reaction time of valves. See note 5.
b) Reaction time of the machine control system. See note 6.
c) Reaction time of the safeguarding device, including its interface. See note 7.
d) Additional time required by the use of braking performance monitor. See note 8.

Note 1: Full revolution (pin) clutches have one or more engaging points within a rotation of the flywheel where the clutch can be engaged. Once engaged. the clutch completes a full revolution or cycle (stroke) before it is disengaged and brought to a stop. After the machine is tripped by the control system or mechanical treadle, pedal, hand controls or levers, the clutch typically engages after the flywheel rotates to the engaging position. Therefore, it is possible that the tripping device could have tripped the clutch just after the flywheel engaging point has passed and will not engage the clutch until the flywheel has rotated one full revolution. Assuming that the hazard exists during the closing portion of the cycle or stroke (provided that no hazards are generated during the opening portion), the time to stop hazardous motion could take up to one and a half times the time it takes the machine to complete one cycle (stroke). For clutches with only one engaging point the stopping time, Ts, is:

$$Ts = 1.5(Tmc) \qquad \text{Equation (2)}$$

Where: Tmc = the time it takes to complete a machine cycle (stroke)

Some clutches have multiple engaging points on the flywheel. Therefore. the clutch has more than one position where engagement can occur. The equation for calculation of this time, the stopping time Ts is:

$$Ts = (1/2 + 1/N)(Tmc) \qquad \text{Equation (3)}$$

Where: N = the number of engaging points on the flywheel

For machines that are tripped (or sequenced) to initiate the machine cycle. which in turn initiates immediate motion and which cannot be stopped until the completion of the machine cycle. the stopping time Ts is:

$$Ts = Thm \qquad \text{Equation (4)}$$

Where: Thm = the time, after initiation of motion, until hazardous motion is completed

Note 2: The stopping time, Ts, of part revolution clutch driven machines or machines that can be stopped at any point in the machine cycle or stopped anywhere during the hazardous portion of the machine cycle is equal to the time it takes to stop hazardous motion (see also, Note 3). If eddy current or other electro-magnetic clutches are used, see Note 4.

Note 3: The stopping time, Ts, is the time it takes to disengage the clutch, the time it takes to apply the brake and the time it takes the brake to stop motion.

Note 4: The stopping time, Ts, for direct drive, motor driven machines utilizing full voltage motors, servo systems, vector systems or other variable speed systems, is equal to the time it takes to stop hazardous motion after a stop command or signal is given to the motor contactor or

drive system. This time should take into consideration both uncontrolled stops (category 0) and controlled stops (categories 1 and 2) including dynamic braking. See ANSI / NFPA 79.

Note 5: The stopping time, Ts, of machines actuated or controlled by pneumatic or hydraulic valves must include the reaction time of the valve measured from the time that the valve is de-energized until motion is stopped. Stopping time for systems using valves may be affected by high or low supply pressures, exhaust restrictions, sluggish spools or poppets or performance of the pilot sections.

Note 6: Control systems inherently have a delay from the time its inputs or the system logic initiate a stop command, until the system's output de-energizes the actuator. This time, Tc, is the reaction time of the control system.

Note 7: Safeguarding devices also have a delay from the time that they sense the presence, or absence (for hand controls and trips or hostage controls) of individuals. Additionally, there may be a delay caused by the interface between the device and the control system. The interface may, as an example, include interposing relays. The interface delay must be added to the total delay time. This time, Tr, is the reaction time of the device and its interface. The reaction time of the device, without the interface, is stated by the device manufacturer.

Note 8: Stopping performance monitors are used to assure that a gradual increase in the stopping time caused by the degradation of components does not exceed the stopping time used to calculate the safety distance for the safeguarding device. Stopping time at the end of a machine cycle is usually different than the stopping time during the hazardous portion(s) of the cycle, and since these times may vary due to such factors as machine temperature, tool loading and energy transferred to the workpiece, a factor, Tspm, must be added to the total stopping time.

Tspm is a calculated factor. As an example, if the monitor is set to a point or time 5% greater than the normal stopping position or time, then Tspm is equal to 5% of Ts.

Therefore, the total stopping time is the sum of these factors and may be represented by the following equation:

$$T = Ts + Tc + Tr + Tspm \qquad \text{Equation (5)}$$

Stop time measuring devices are normally used to measure these times. When using these devices, Ts can be measured from the output of the control system until motion is stopped. Likewise, Ts + Tc can be measured from the input to the control system. Some stop time measuring devices include plungers and flags that are used to simulate operation by an individual. When using this type of device, it is possible to measure Ts + Tc + Tr. (Use the manufacturer's value for Tr, when provided).

Substituting Ts + Tc + Tr + Tspm for T in Equation 1, the equation for calculating the safety distance becomes:

$$Ds = K\,(Ts + Tc + Tr + Tspm) \qquad \text{Equation (6)}$$

An additional distance needs to be added to the safety distance when using electro-optical devices, safety mats, single control safety devices and RF devices.

Electro-optical and RF devices do not detect the presence of individuals at the plane or within the field of the device until an amount of penetration into the plane or field occurs. This amount is known as the distance (depth) penetration factor. The distance that must be added is called Dpf. See Figures D.1 -- D.6 and D.9.

When using safety mats and single control safety devices, it is possible for the individual to be reaching into the hazardous area or stepping onto the mat beyond its edge. The amount of reach or stride should be added to the safety distance and can be called Dpf. See Figures D.2, D.6 and D.7.

The equation for calculating the safety distance for these devices, therefore, is:

$$Ds = K\,(Ts + Tc + Tr + Tspm) + Dpf \qquad \text{Equation (7)}$$

Equation 7 can be used to calculate the safety distance for the eight safeguarding devices listed in paragraph 2 by substituting the non-zero values or combination of values as determined above.

NOTE ON THE FOLLOWING FIGURES: Figures D.1 through D.3 provide the reader with the means to find the value of Dpf they need to use in the safety distance formula. Figures D.4 through D.9 are examples per the different applications of how to use the safety distance formula once the reader has determined Dpf.

Figure D.1: Penetration factor, *Dpf*, for presence-sensing devices used in a vertical application with object sensitivity less than 64 mm (2.5 inches)

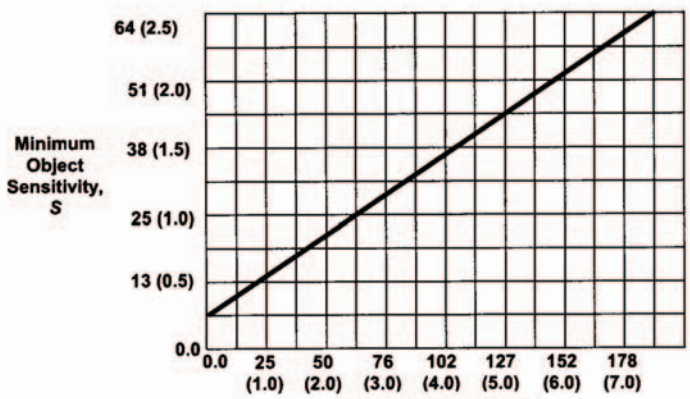

***Dpf* = 3.4 (*S* – 7) mm**
(*Dpf* = 3.4 (*S* – 0.275) in)

Dpf, the distance added to the safety distance due to the penetration factor compensates for varying object sensitivities of electro-optical presence-sensing devices.

When blanking features are used and when the blanked area is not completely filled by the workpiece or part, or by mechanical guarding, the minimum object sensitivity can be calculated as:

Object sensitivity = size of the blanked area plus minimum object sensitivity without blanking.

Once this value is found, then determine *Dpf*.

If the entire blanked area is filled with mechanical guarding or other fixed material or guards, use the device's object sensitivity to determine *Dpf*.

Figure D.2: *Dpf* for ground level devices that can be reached over (30° or less)

Examples include safety mats, area scanners, and horizontally mounted electro-optical devices.

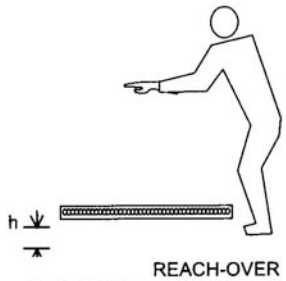

REACH-OVER
Dpf = 1200 mm (48 in) for horizontal sensing field applications without vertical sensing.

Allowable Sensing Field Heights in mm. (in)

Objects Sensitivity (*S*)	Mounting Height (*h*) Minimum	Mounting Height (*h*) Maximum
< 50 (2)	0	990 (39)
64 (2.5)	190 (7.5)	990 (39)
76 (3.0)	380 (15)	990 (39)
89 (3.5)	570(22.5)	990 (39)
102 (4.0)	760 (30)	990 (39)
108 (4.25)	860 (33.75)	990 (39)
117 (4.6)	990 (39)	990 (39)

Minimum mounting height (*h*) can also be determined by the following,
h = 15 (*S* – 50) mm
h = 15 (*S* – 2) in
where *S* is the object sensitivity.

NOTE - Minimum depth-of-field or sensing area must hinder an individual from stepping over the electro-optical presence-sensing device or safety mat. This distance is 1.2 m (4 ft) if an individual can step over and pass unrestricted; 900 mm (3 ft) if supplemental safeguarding or physical barriers are used such that an individual must stand within the sensing area. For electro-optical presence-sensing devices inclined greater than 30° from horizontal, and for which you cannot reach over without being detected, use Figure D.1.

Figure D.3: *Dpf* for object sensitivities greater than 64 mm (2.5 inches)

For electro-optical presence-sensing devices using large blanked areas, or if an individual can otherwise reach through or over the sensing field and not be detected, the distance between any two adjacent detection points shall not be greater than 600 mm (24 in), i.e., from one active point to the next active point above.

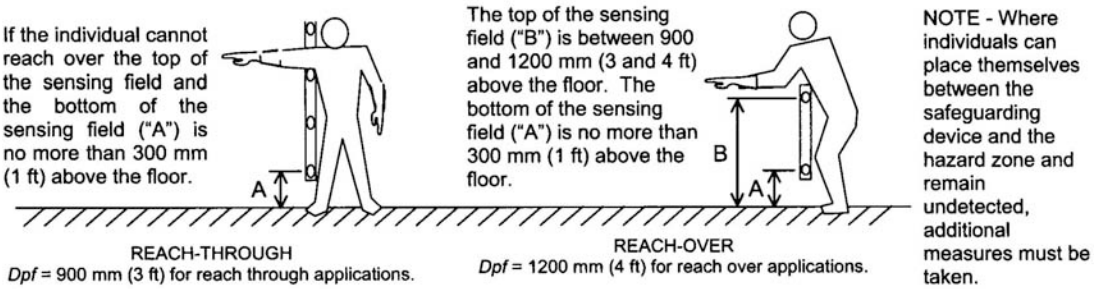

Figure D.4: Example of guarding with object sensitivity less than 64 mm (2.5 inches)

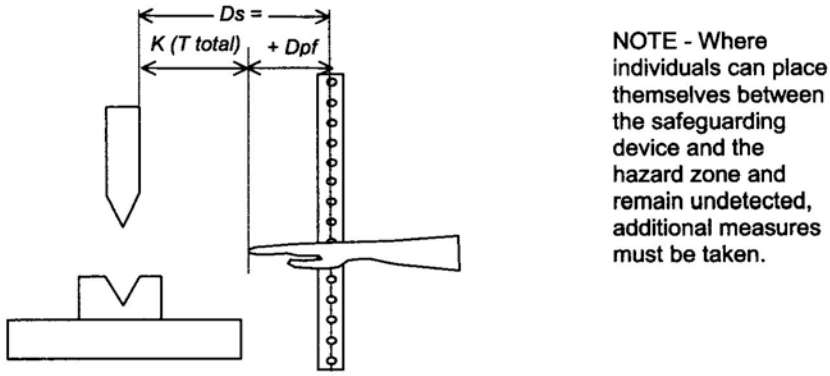

Figure D.5: Example of guarding with various object sensitivities

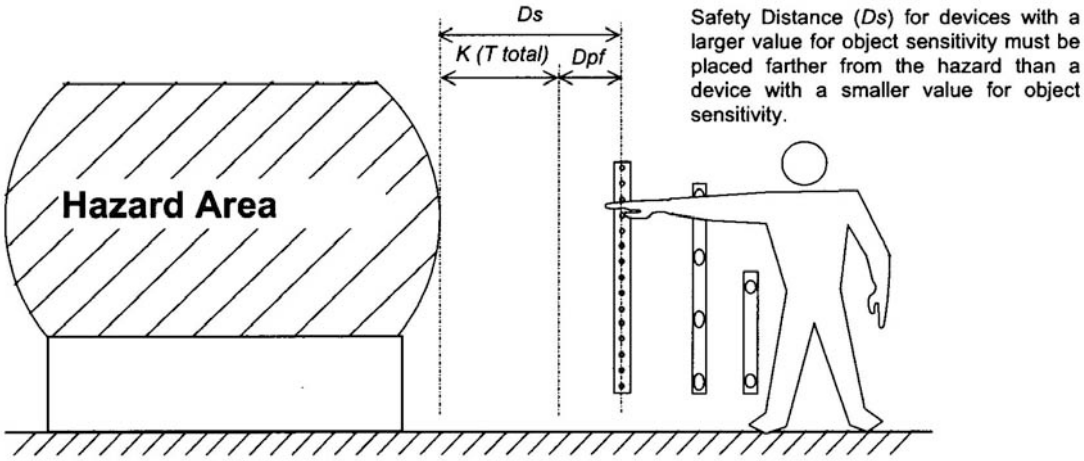

Figure D.6: *Dpf* for ground level devices that can be reached over (30° or less)

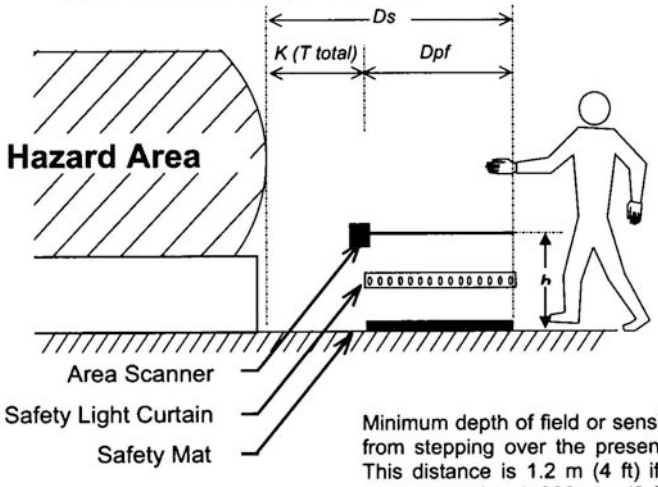

Allowable Sensing Field Heights in mm (in)

Objects Sensitivity	Mounting Height (*h*) Minimum	Mounting Height (*h*) Maximum
< 50 (2)	0	990 (39)
64 (2.5))	190 (7.5)	990 (39)
76 (3.0)	380 (15)	990 (39)
89 (3.5)	570 (22.5)	990 (39)
102 (4.0)	760 (30)	990 (39)
108 (4.25)	860 (33.75)	990 (39)
117 (4.6)	990 (39)	990 (39)

Minimum mounting height (*h*) can also be determined by the following,
$h = 15\ (S - 50)$ mm
$h = 15\ (S - 2)$ in
where S is the object sensitivity.

Minimum depth of field or sensing area must hinder an individual from stepping over the presence-sensing device or safety mat. This distance is 1.2 m (4 ft) if an individual can step over and pass unrestricted, 900 mm (3 ft) if supplemental safeguarding or physical barriers are used such that an individual must stand within the sensing area.

Table D.1: Maximum Guard openings vs. Distance from Hazard Zone in millimeters (inches)

As a function of gap size				As a function of distance			
Known Gap		Minimum Distance		Known Distance		Maximum Gap	
0 – 6	(0 – 0.24)	13	(0.5)	< 13	(< 0.5)	Not permitted	
6.1 – 11	(0.25 – 0.375)	64	(2.5)	13 – 63.9	(0.5 – 2.49)	6	(0.250)
11.1 – 16	(0.376 – 0.625)	89	(3.5)	64 – 88.9	(2.5 – 3.49)	11	(0.375)
16.1 – 32	(0.626 – 1.250)	166	(6.5)	89 – 165.9	(3.5 – 6.49)	16	(0.625)
32.1 – 49	(1.251 – 1.875)	445	(17.5)	166 – 444.9	(6.5 – 17.49)	32	(1.250)
49.1 – 132	(1.876 – 5.000)	915	(36.0)	445 – 914.9	(17.5 – 35.99)	49	(1.875)
> 132	(> 5.0)	Not permitted		≥ 915	(≥ 36.0)	132	(5.000)

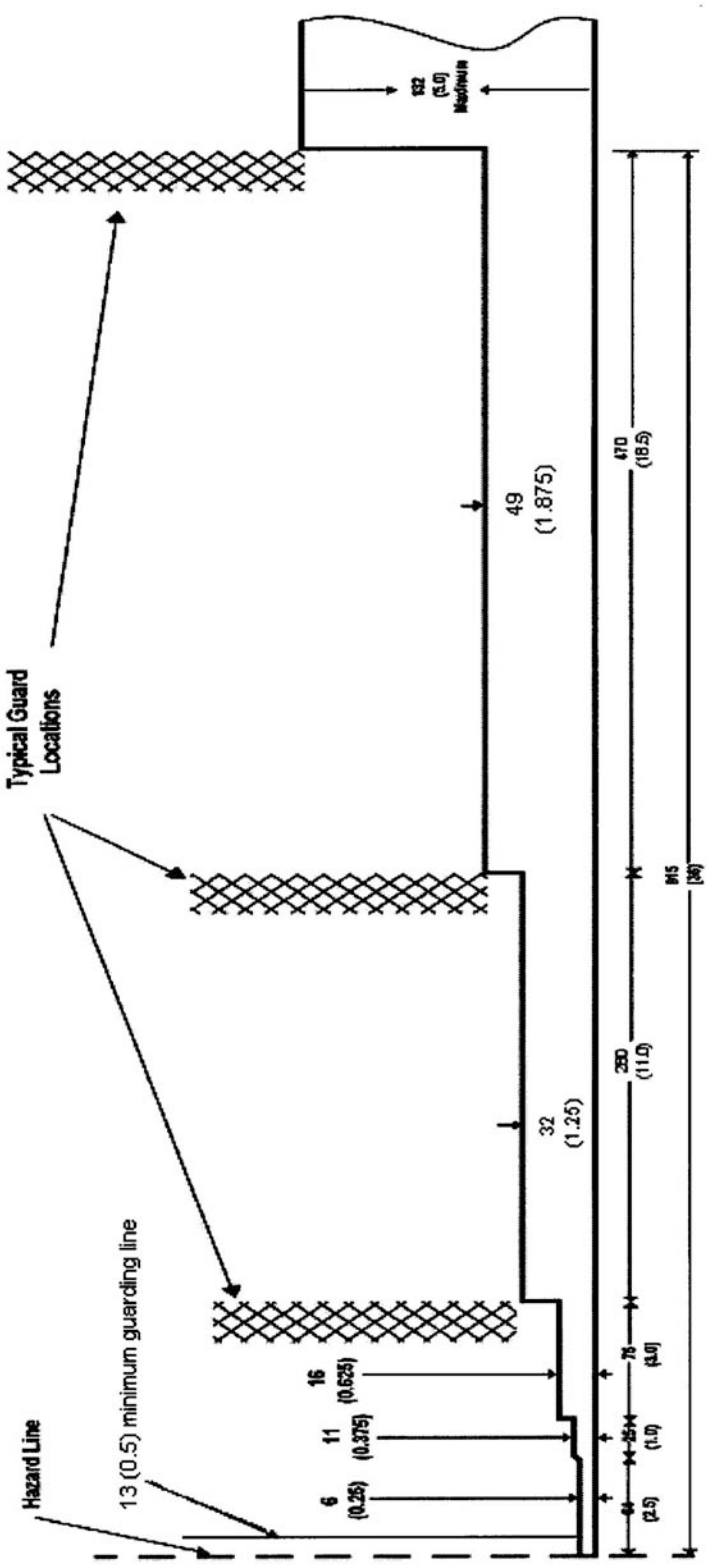

Figure D.10: Location of Guards vs. Openings; Distance from hazard in millimeters (inches)
At distances over 915 mm (36 in), use 132 mm (5 in) as a maximum opening.

Glossary

NOTICE

Cross-references to other glossary entries are shown in *italics.*

ANSI	Stands for American National Standards Institute, a U.S. clearinghouse and coordinating body for voluntary standards activity on the national level.
CE	CE Mark, or CE marking as it is officially named, is an obligatory product mark for the European market, which indicates compliance "certification" according to the requirements formulated in the approximately 22 European "CE Marking Directives" and subsequent European standards.
control reliability	A regulation defined in ANSI B11.1-2009 and OSHA 1910.217 requiring that a single component failure in a clutch/brake control circuit not prevent the normal stopping action of the press, not create an unintended stroke, and not allow initiation of a subsequent stroke until the failure has been corrected.
CSA	Stands for Canadian Standards Association, an organization that develops standards and codes for Canada. There are several testing services firms, including *UL*, authorized to test products and certify to these standards. CSA itself also provides these services.
depth penetration factor	A value used in the ANSI formula for calculating the *safety distance*. The depth penetration factor is a measure of how far an object, like an operator's hand, can move through the light curtain before the light curtain reacts.
EDM	Stands for External Device Monitoring (EDM), a safety function that monitors the Shadow 8 interface to the guarded machine. EDM checks the interfacing relays to verify that they are responding correctly to the light curtain and that there is no inconsistency between the state of relays and that of the safety outputs. Also called Machine Primary Control Element (MPCE) monitoring.
emergency stop	A signal sent to the press in response to a malfunction that stops the press immediately.
fault code	A numeric code displayed on the *IBIs* on the Main Receiver indicating that a Shadow 8 fault has occurred.
hand speed constant	A value used in the ANSI formula for calculating the *safety distance*. The hand-speed constant is the distance one can theoretically move one's hand and arm in one second. OSHA recommends a hand-speed constant of 63 inches per second.

IBI	Stands for Individual Beam Indicator, a red *LED* located next to each phototransistor on the receiver. IBIs indicate beams that are misaligned, beams that are interrupted during a light curtain penetration, and the area occupied by a programmed blanking fixture. IBIs on the Main Receiver also display *fault code*s.
LED	Stands for light-emitting diode, a type of indicator whose state (i.e., lit or unlit) provides information about the status of the light curtain.
ninety-degree stop time test	A test required to set the proper *safety distance* for personnel-guarding devices, including light curtains, two-hand controls, and type-B movable barriers. This test checks the stopping time of the press at its most critical stopping point, normally the midpoint of the downstroke (i.e., 90°), while the press is running in Continuous mode (or Single-stroke if the press does not have a selector setting for Continuous). Stopping time is a value required in the ANSI formula for calculating the *safety distance*.
object sensitivity	A value required in deriving the *depth penetration factor* for a light curtain. Object sensitivity specifies the smallest diameter object that a light curtain can detect anywhere in its field.
OSHA	Stands for Occupational Safety and Health Administration, a government agency that has established regulations for mechanical power presses, including presence-sensing devices for point-of-operation guarding.
OSSD	Stands for Output Signal Switching Device, a type of safety output. Shadow 8 has two OSSD outputs that can be connected to the guarded machine's *emergency stop* circuit to stop the machine whenever the light curtain is obstructed.
pinch point	The hazardous area between the upper and lower die from which OSHA mandates that the operator should be protected by installation of safety equipment such as light curtains, two-hand controls, and other barriers.
response time	The time it takes a machine control to activate the machine's brake.
safety distance	The distance from the pinch point that OSHA requires safety equipment such as light curtains, two-hand controls, and type-B movable barriers to be installed to assure the safety of the operator. The safety distance is calculated using a precise formula set by OSHA regulations and/or ANSI standards.
stopping time	See *ninety-degree stop time test*.
TÜV	A testing services firm providing international safety testing and certification services.
UL	Stands for Underwriters Laboratories, a testing services firm providing safety testing and certification services.

Index

–A–

AC input fuse (F1), checking and replacing, 4-8
AC wiring, 2-37
alignment
  aligning brackets, 2-21
  aligning optic heads, 2-49
  checking optic head alignment, 4-7
American National Standards Institute (ANSI)
  extracts of standards, D-5
  formula for calculating safety distance, 2-6
ANSI. *See* American National Standards Institute (ANSI)
auxiliary output(s), wiring, 2-44

–B–

blanking
  increasing safety distance for blanking windows, 2-10
  programming a fixed blanking window, 3-4
  setting a floating blanking window, 3-7
brackets. *See also* universal mounting brackets
  aligning, 2-21
  designing, 2-16, 2-17
  installing, 2-16
  mounting light curtains on, 2-16
  mounting requirements, 2-16
brake monitor setting
  using in ANSI safety distance formula, 2-7
  using in OSHA safety distance formula, 2-5

–C–

checkout procedure, 2-55
codes. *See* fault codes
consecutive beam rule, 2-49, 3-5
control box
  dimensions, 2-30
  mounting, 2-29
  setting option switches in, 2-45
  wiring AC power to, 2-37
  wiring auxiliary output, 2-44
  wiring EDM monitor inputs to, 2-41
  wiring main optic heads to, 2-31
  wiring stop circuits to, 2-39
cross talk, preventing, 2-27, 4-11

–D–

depth penetration factor (Dpf)
  relationship to object sensitivity, 2-7
  using in ANSI safety distance formula, 2-7
dimensions
  control box, 2-30
  floor stands, 2-17
  mirrors, 2-24
  optic heads, 2-19
  universal mounting brackets, 2-20
DIP switches. *See* option switches

–E–

emergency stop circuit, wiring Shadow 8 to, 2-39
extension optic heads
  adding, 2-59
  connecting, 2-35
  removing, 2-60
External Device Monitoring (EDM) inputs
  setting option switch 2 in main receiver, 2-47
  setting SW1 EDM switch in control box, 2-41
  wiring, 2-41

–F–

fault codes
  using to troubleshoot Shadow 8 faults, 4-1
  viewing on Individual Beam Indicators (IBIs), 1-9, 3-2, 4-1
fixed blanking. *See* blanking
floating blanking. *See* blanking
floor stands
  dimensions, 2-17
  mounting light curtains on, 2-16
  mounting requirements, 2-16
fuses. *See* AC input fuse (F1)

–G–

guarding
  increasing safety distance for perimeter guarding, 2-10
  OSHA requirements for side guards, 2-22
  supplemental guarding, 2-13
  using mirrors for multiple-sided guarding, 2-22, 2-23

–H–

hand-speed constant
  using in ANSI safety distance formula, 2-7
  using in OSHA safety distance formula, 2-5

–I–

IBIs. *See* Individual Beam Indicators (IBIs)
indicators. *See* LED indicators
Individual Beam Indicators (IBIs)
  using to align optic heads, 2-51, 2-57
  using to check optic head alignment, 4-7
  using to diagnose a dirty lens window, 4-7
  viewing fault codes on, 4-1

inputs, wiring to control
AC power, 2-37
External Device Monitoring (EDM), 2-41
main optic heads, 2-31

–K–

key switch. *See* Program/Run/Start key switch, Program Off/On key switch

–L–

LED indicators
Individual Beam Indicators (receiver), 3-1
operating state indicators (main receiver), 3-1
power indicator (control), 3-2
safety relay indicators (control), 3-2
status indicator (main transmitter), 3-1
lens(es), checking and cleaning, 4-7

–M–

main board, location of components, 2-32
main optic heads
wiring directly to WPC, A-1
wiring to control, 2-31
mirrors
dimensions, 2-24
using for multiple-sided guarding, 2-22
mounting brackets. *See* brackets
mounting location (Shadow 8 heads), selecting, 2-15
MPCE. *See* External Device Monitoring (EDM) inputs

–O–

object sensitivity
and blanking windows, 2-10
relationship to depth penetration factor, 2-7
using in ANSI safety distance formula, 2-7
Occupational Safety and Health Administration (OSHA)
extracts of regulations, D-1
formula for calculating safety distance, 2-4
operating mode, setting, 2-46, 3-3
operating state LED indicators (main receiver), 3-1
optic heads
adding extension units, 2-59
connecting extension units, 2-35
dimensions, 2-19
mounting loosely, 2-28
removing extension units, 2-60
wiring main units directly to WPC, A-1
wiring main units to control, 2-31
option switches, setting in control box, 2-45
OSHA. *See* Occupational Safety and Health Administration (OSHA)
outputs
wiring auxiliary output(s), 2-44
wiring N/O stop relay outputs, 2-40
wiring stop relay outputs to a Programmable Logic Controller (PLC), 2-42
wiring stop relay outputs to a Wintriss clutch/brake control, 2-43

–P–

pass-through protection, providing, 2-12
perimeter guarding, increasing safety distance for, 2-10
PLC. *See* Programmable Logic Controller (PLC)
PMA. *See* Precision Metalforming Association (PMA)
power requirements, AC power, 2-37
Precision Metalforming Association (PMA), interpretation of OSHA regulations, D-1
Presence Sensing Device Initiation (PSDI), special requirements for, 2-14
Program Off/On key switch
location on Shadow 8 control box, 1-5
location on WPC front panel, A-1
using to program a fixed blanking window, 3-6
Program/Run/Start key switch
location on Shadow 8 control box, 1-5
location on WPC front panel, A-1
using to clear a light curtain fault, 3-2
using to program a fixed blanking window, 3-6
using to reset the light curtain, 1-10, 3-2, 3-3
Programmable Logic Controller (PLC), wiring stop relay outputs to, 2-42
PSDI. *See* Presence Sensing Device Initiation (PSDI)

–R–

receiver. *See* optic heads
reflective surface interference, preventing, 2-25
relays
checking for failure, 4-10
replacing relay board, 4-11
response time (Shadow 8)
using in ANSI safety distance formula, 2-7
using in OSHA safety distance formula, 2-5

–S–

safety distance
calculating using ANSI formula, 2-6
calculating using European formulas, 2-8
calculating using OSHA formula, 2-4
increasing for blanking windows, 2-10
increasing for perimeter guarding, 2-10
providing pass-through protection within, 2-12
safety relay outputs, wiring, 2-39
safety relays. *See* stop relay outputs, relays
shock mounts
mounting control with, 2-29
mounting optic heads with, 2-28
side guards. *See* guarding
specifications, 1-13
stands. *See* floor stands

stop relay outputs
wiring in an N/O circuit, 2-40
wiring to a Programmable Logic Controller (PLC), 2-42
wiring to a Wintriss clutch/brake control (WPC), 2-43
stopping time
using in ANSI safety distance formula, 2-7
using in OSHA safety distance formula, 2-5
suppressors, installing in EDM circuits, 2-42

–T–

test procedure, 2-56
transmitter. *See* optic heads
troubleshooting, 2-52

–U–

universal mounting brackets
adjusting to align heads, 2-15, 2-21
dimensions, 2-20
mounting heads using T-slot kit, 2-15, 2-20

–W–

Wintriss clutch/brake control (WPC)
wiring Shadow 8 main optic heads directly to, A-1
wiring stop relays outputs to, 2-43
wiring connections (control)
AC power, 2-38
auxiliary output(s), 2-44
main receiver, 2-34
main transmitter, 2-34
stop relay outputs to a PLC, 2-42
stop relay outputs to a Wintriss clutch/brake control (WPC), 2-43
stop relays outputs in an N/O circuit, 2-40
wiring connections (WPC), main receiver/transmitter, A-2
WPC. *See* Wintriss clutch/brake control (WPC)

Wintriss Manuals

Wintriss Product	Installation Manual Doc. No.	User Manual/CD Doc. No.
AutoSet (1500, 1500 Plus, 1504, 1504 Plus)	DA71747	DA71447
AutoSetPAC (Tonnage Monitor)	DA71413	DA71443
Die Protection Handbook	N.A. *	1130300 *
DiPro 1500	DA71428	DA71447
DSI 2 Sensor Interface	N.A. *	DA66970 *
LETS Machine Interface (LMI)	N.A. **	DA71974 **
MultiPAC Types 1 and 2	DA71409	DA71443
MultiPAC Types 4 and 5	DA71410	DA71443
ProCam 1500	DA71430	DA71447
ProPAC (Process Monitor-In-die Measurement)	DA71411	DA71443
RamPAC (Shut Height, Counterbalance & Cushion Control)	DA71412	DA71443
Servofeed Interface-Coe/Wintriss	DA71415	DA71443
Servofeed Interface-CWP/Wintriss	DA71416	DA71443
Servofeed Interface-DiPro	DA71429	DA71447
Servofeed Interface-Electrocraft/Wintriss	DA71417	DA71443
Servofeed Interface-Indramat/Wintriss	DA71418	DA71443
Servofeed Interface-ProCam	DA71431	DA71447
Servofeed Interface-SmartPAC	DA71420	DA71443
Servofeed Interface-Waddington/Wintriss	DA71419	DA71443
SFC Machine Interface (SMI)	N.A. **	1140800**
Shadow V Safety Light Curtain	DA71433	DA71449
Shadow VI Safety Light Curtain	DA71422	DA71445
Shadow VII Safety Light Curtain	N. A. *	1129400 *
Shadow 8 Safety Light Curtain	N. A. *	1139300 *
SmartPAC (w/ DiProPAC & ProCamPAC)	DA71439	DA71454
SmartPAC Hydraulic	DA71435	DA71451
SmartPAC Run Mode (Spanish)	N. A. *	DA71443 *
SmartPAC w/ WPC II Integration	DA71440	DA71455
SmartPAC 2 (w/ DiProPAC & ProCamPAC)	DA71406	DA71441
SmartPAC 2 Hydraulic	DA71436	DA71451
SmartPAC 2 Servo	DA71437	DA71452
SmartPAC 2 w/ WPC 2000 Integration	DA71407	DA71442
SmartPAC 2 w/WPC 2000 Run Mode (Spanish)	N. A. *	DA71443
WaveFormPAC (Advanced Load Analyzer)	DA71414	DA71443
Wintriss Brake Monitor	DA71432	DA71448
Wintriss Clock Display	N. A. *	DA67206 *
WPC II Wintriss Press Control	DA71438	DA71453
WPC 1000 Wintriss Press Control	DA71423	DA71446
WPC 2000 Wintriss Press Control	DA71421	DA71444
WPC 2000 Option 2	DA71408	DA71442

* Installation Manual not available; User Manual available in hard copy only. Die Protection Handbook available in hard copy (1102400) and on CD (1130300).

** Installation Manual not available. User Manual available on CD only.

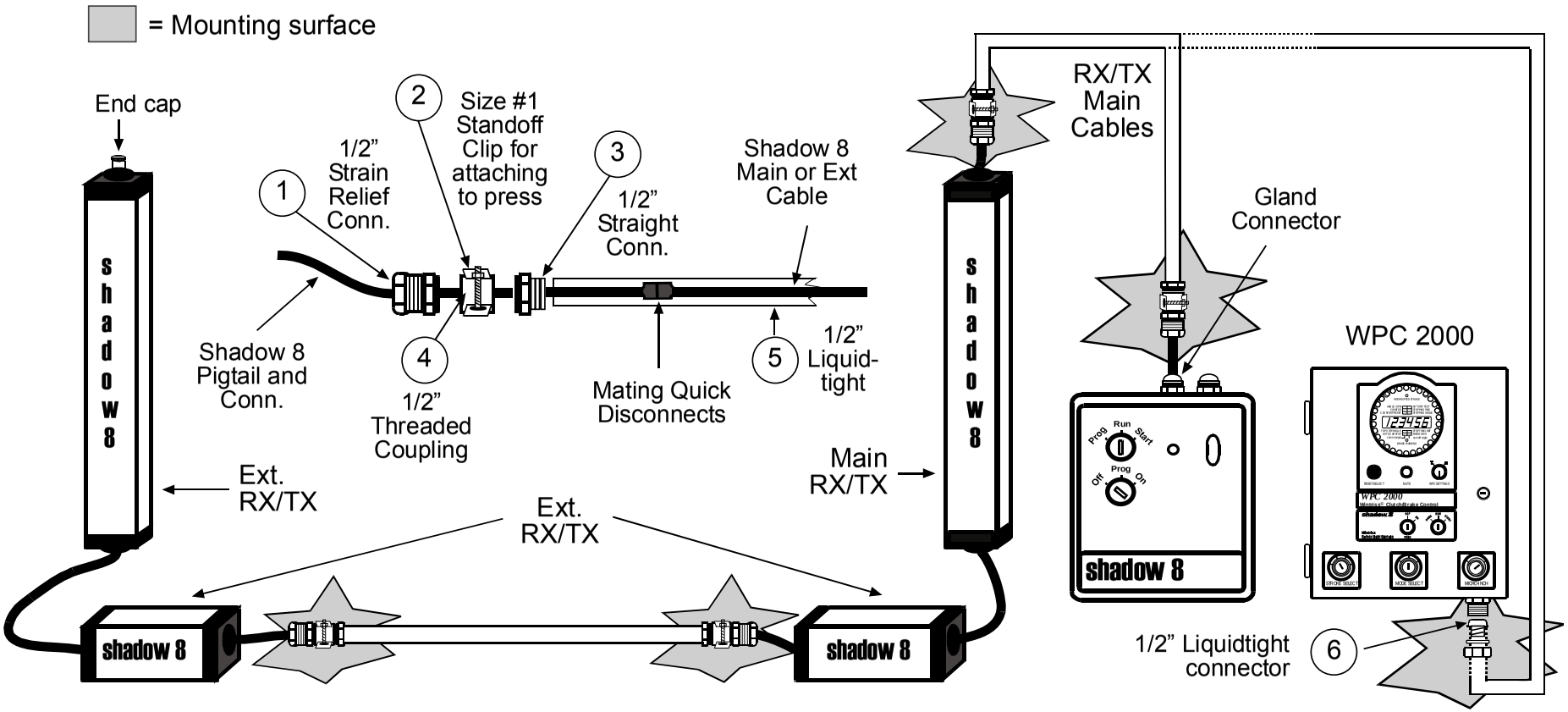

Example: 1 Main, 3 Extensions, and cables using ½" Liquidtight conduit & fittings for connection to optional control or WPC

1	T&B (Thomas and Betts or equivalent)	Strain relief straight connector
2	T&B (Thomas and Betts or equivalent)	Size #1 Standoff Clip
3	T&B (Thomas and Betts or equivalent)	½ inch straight connector
4	T&B (Thomas and Betts or equivalent)	½ inch threaded coupling
5	T&B (Thomas and Betts or equivalent)	½ inch Liquidtight flexible metal conduit
6	T&B (Thomas and Betts or equivalent)	½ inch Liquidtight connector

Notes: 1.) All connectors and Liquid-tight must be ½" for Shadow 8 connector to pass through the connector.
2.) Remove blue heat formed insulator from T&B straight connector (if present) to allow quick disconnect to pass through it.
3.) Slice strain relief connector bushing with sharp razor knife so it will slip over cable. Do not use plastic retaining ring.
4.) You may use a junction box instead of the standoff clip (item 2) to attach the Liquidtight conduit to the mounting surface.

Figure A. Installing Shadow 8 Cabling in Liquidtight Conduit

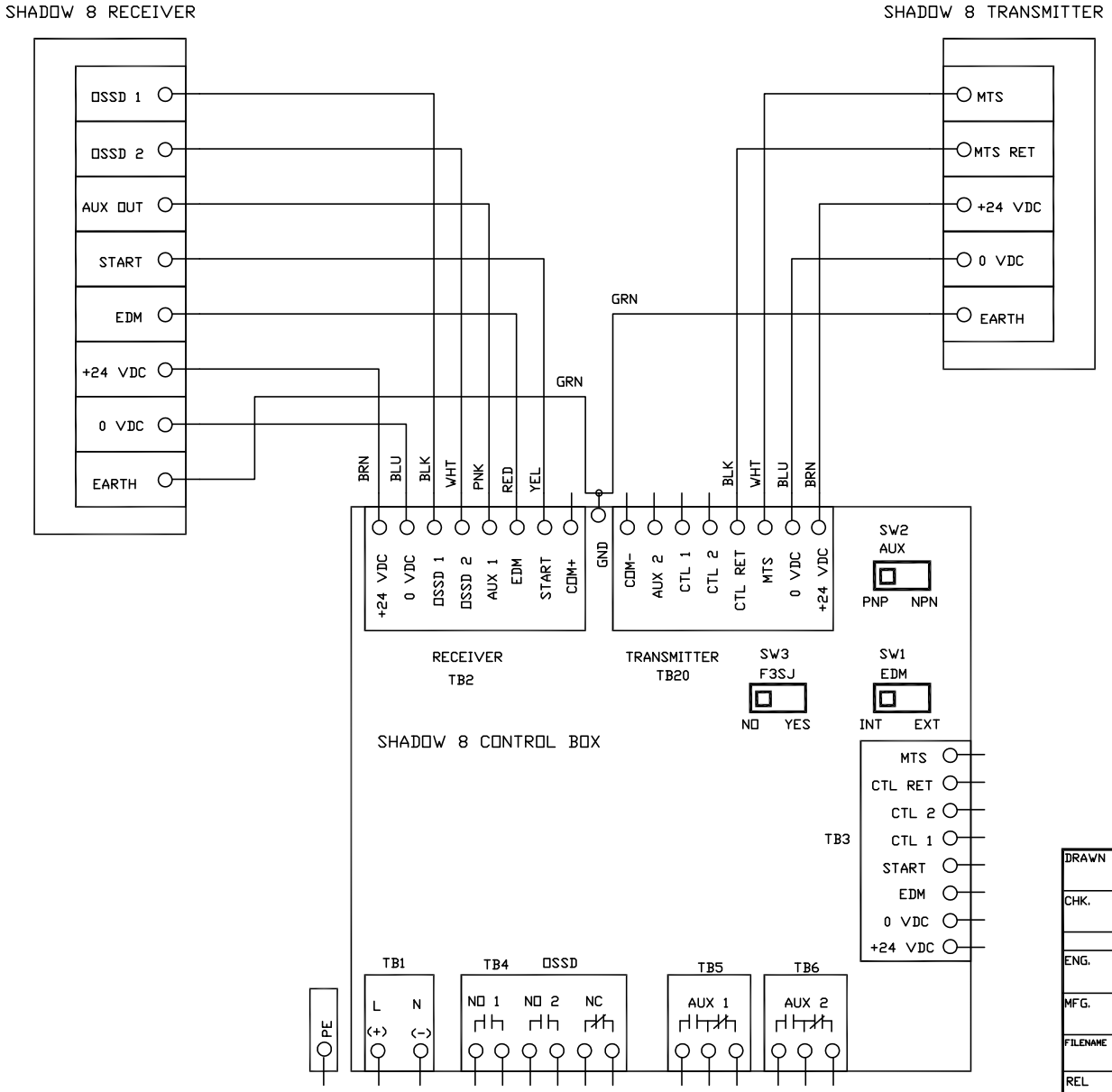

REVISIONS			
REV	DESCRIPTION	DATE	APP'D

SET MODE SWITCHES SWA AND SWB BEHIND A FLIP DOOR ON BOTTOM OF THE RECEIVER UNIT AS FOLLOWS:

	SWA	SWB
FOR AUTOMATIC START	SW1 - OFF	OFF
START/RESTART INTERLOCK	SW1 - ON	ON
EDM ENABLED	SW2 - ON	ON
SCAN CODE A	SW3 - OFF	OFF
SCAN CODE B	SW3 - ON	ON
FLOATING/BLANKING 1 BEAM DISABLED	SW4 - OFF	OFF
FLOATING/BLANKING 1 BEAM ENABLED	SW4 - ON	ON
FIXED BLANKING DISABLED	SW5 - OFF	OFF
FIXED BLANKING ENABLED	SW5 - ON	ON
SHORT RANGE	SW6 - OFF	OFF
LONG RANGE	SW6 - OFF	ON

SET MODE SWITCH BEHIND THE FLIP DOOR ON BOTTOM OF THE TRANSMITTER UNIT AS FOLLOWS:

SCAN CODE A	SW1 - OFF
SCAN CODE B	SW1 - ON
MTS DISABLED	SW2 - OFF

DRAWN ADB	DATE 11/23/09	WINTRISS CONTROLS GROUP
CHK.		
APPROVALS		TITLE SHADOW 8 TX AND RX HEAD WIRING DIAGRAM
ENG.		
MFG.		
FILENAME		CODE IDENT NO. / SIZE B / DRAWING NUMBER FIGURE 1 / REV
REL		SCALE / SHEET OF

REVISIONS			
REV	DESCRIPTION	DATE	APP'D

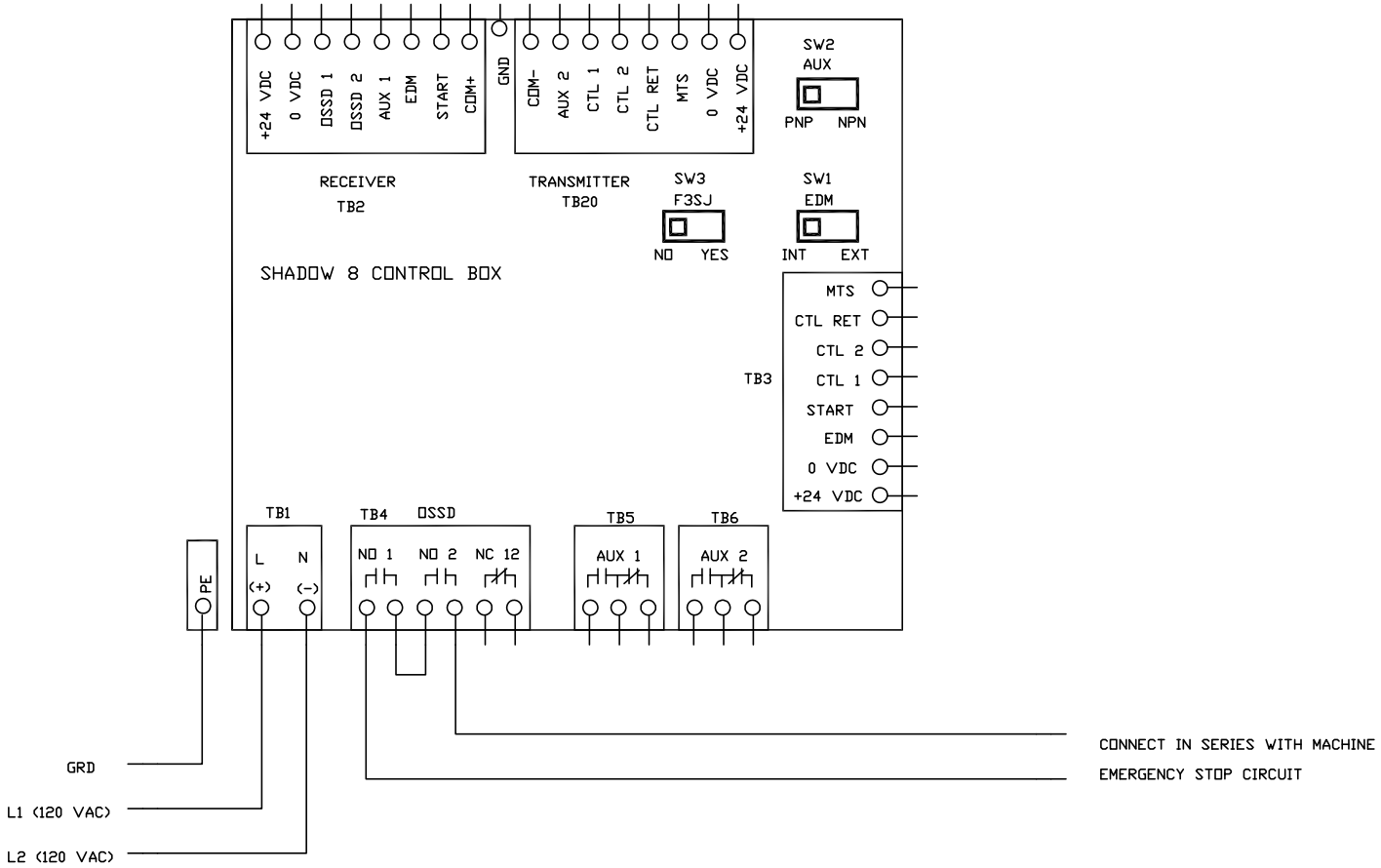

DRAWN ADB	DATE 11/23/09	WINTRISS CONTROLS GROUP
CHK.		
APPROVALS		TITLE SHADOW 8 CONNECTION FOR SIMPLE N/O ESTOP CIRCUIT WIRING DIAGRAM
ENG.		
MFG.		
FILENAME		CODE IDENT NO. / SIZE B / DRAWING NUMBER FIGURE 2 / REV
REL		SCALE / SHEET OF

REVISIONS			
REV	DESCRIPTION	DATE	APP'D

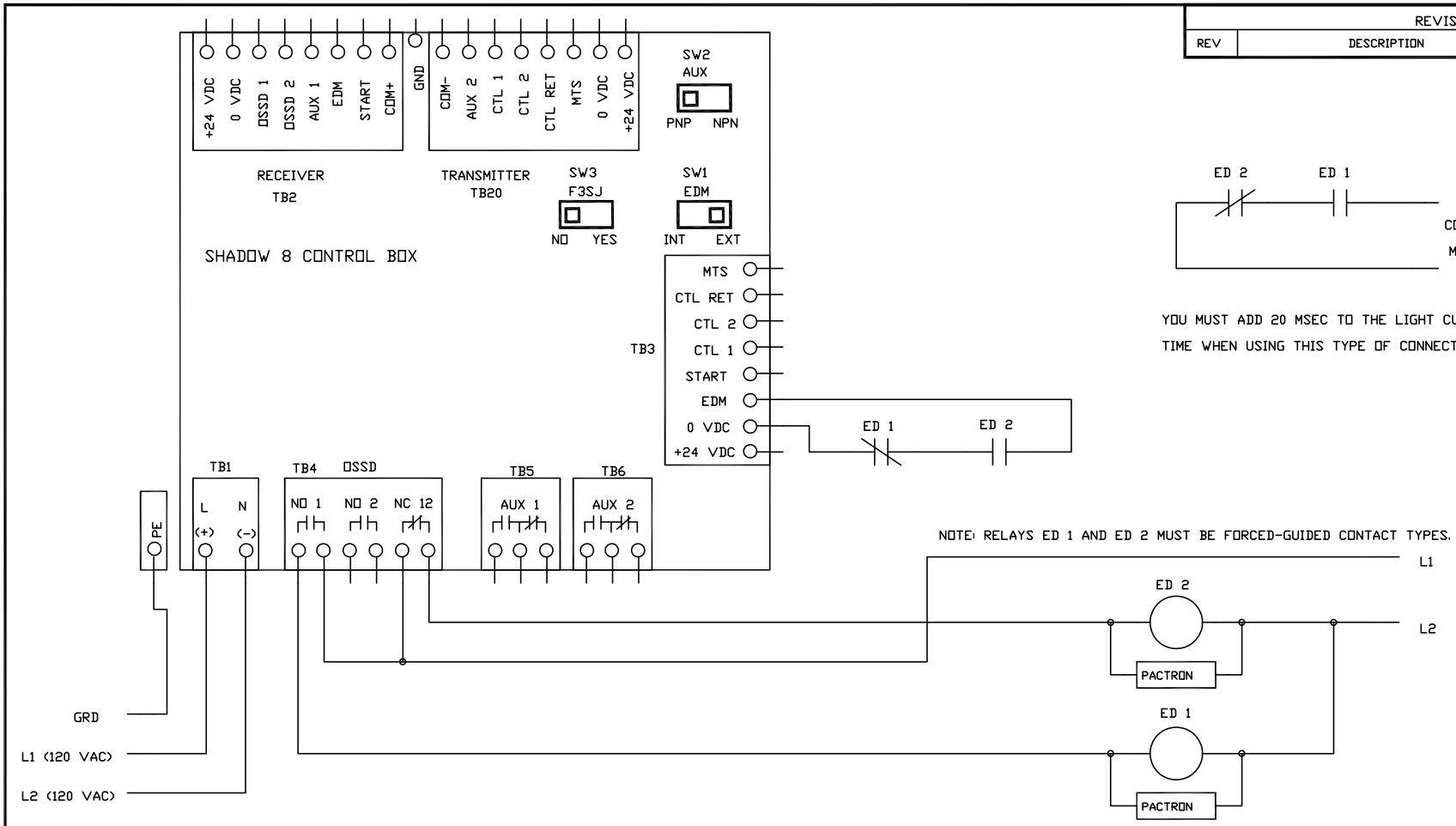

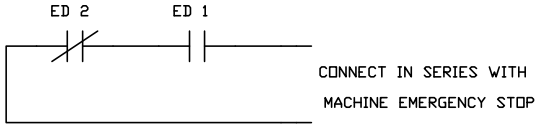

YOU MUST ADD 20 MSEC TO THE LIGHT CURTAIN RESPONSE TIME WHEN USING THIS TYPE OF CONNECTION.

SET THE SW1 EDM SWITCH TO EXTERNAL POSITION (RIGHT HAND SIDE).

DRAWN ADB	DATE 11/23/09	WINTRISS CONTROLS GROUP
CHK.		
APPROVALS		TITLE SHADOW 8 CONNECTION WITH EXTERNAL N/O AND N/C RELAYS WIRING DIAGRAM
ENG.		
MFG.		
FILENAME		CODE IDENT NO. / SIZE B / DRAWING NUMBER FIGURE 3 / REV
REL		SCALE / SHEET OF

REVISIONS			
REV	DESCRIPTION	DATE	APP'D

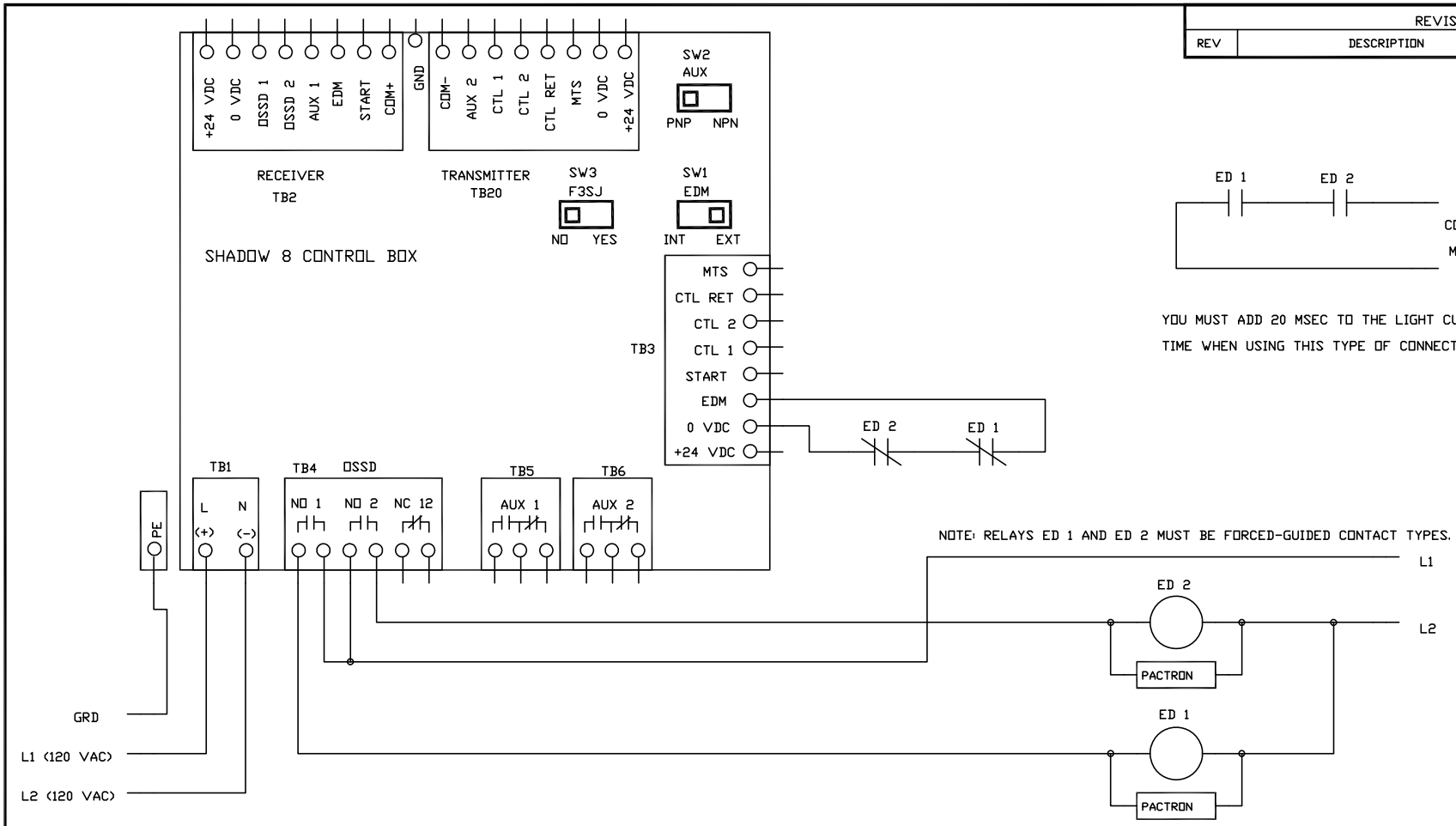

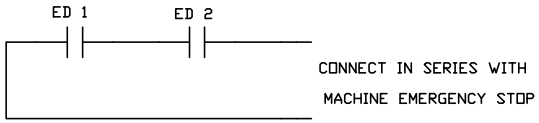

YOU MUST ADD 20 MSEC TO THE LIGHT CURTAIN RESPONSE TIME WHEN USING THIS TYPE OF CONNECTION.

NOTE: RELAYS ED 1 AND ED 2 MUST BE FORCED-GUIDED CONTACT TYPES.

SET THE SW1 EDM SWITCH TO EXTERNAL POSITION (RIGHT HAND SIDE).

DRAWN ADB	DATE 11/23/09	WINTRISS CONTROLS GROUP
CHK.		
APPROVALS		TITLE SHADOW 8 CONNECTION WITH EXTERNAL N/O RELAYS WIRING DIAGRAM
ENG.		
MFG.		
FILENAME		CODE IDENT NO. / SIZE B / DRAWING NUMBER FIGURE 4 / REV
REL		SCALE / SHEET OF

REVISIONS			
REV	DESCRIPTION	DATE	APP'D

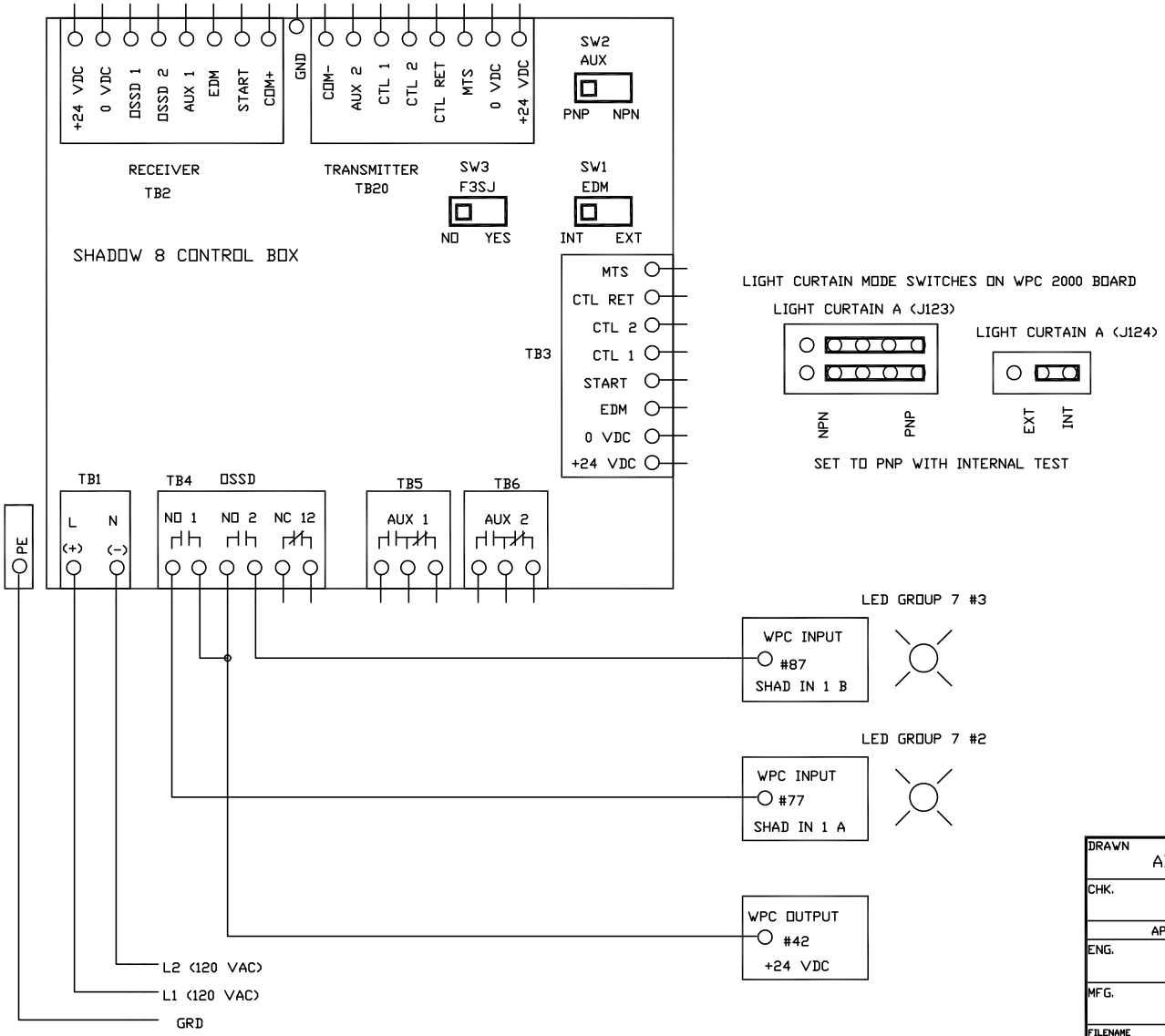

SET MODE SWITCHES SWA AND SWB
BEHIND A FLIP DOOR ON BOTTOM OF THE
RECEIVER UNIT AS FOLLOWS:

		SWA	SWB
FOR AUTOMATIC START	SW1 -	OFF	OFF
EDM ENABLED	SW2 -	ON	ON
SCAN CODE A (Set to match transmitter)	SW3 -	OFF	OFF
SCAN CODE B	SW3 -	ON	ON
FLOATING/BLANKING 1 BEAM DISABLED	SW4 -	OFF	OFF
FLOATING/BLANKING 1 BEAM ENABLED	SW4 -	ON	ON
FIXED BLANKING DISABLED	SW5 -	OFF	OFF
FIXED BLANKING ENABLED	SW5 -	ON	ON
SHORT RANGE	SW6 -	OFF	OFF
LONG RANGE	SW6 -	OFF	ON

SET MODE SWITCH BEHIND THE FLIP DOOR
ON BOTTOM OF THE TRANSMITTER UNIT
AS FOLLOWS:

SCAN CODE A (Set to match receiver)	SW1 - OFF
SCAN CODE B	SW1 - ON
MTS DISABLED	SW2 - OFF

DRAWN ADB	DATE 11/23/09	WINTRISS CONTROLS GROUP	
CHK.			
APPROVALS		TITLE WPC 2000 AND SHADOW 8 CONTROL BOX WIRING DIAGRAM	
ENG.			
MFG.			
FILENAME		CODE IDENT NO. / SIZE B / DRAWING NUMBER FIGURE 5	REV
REL		SCALE / SHEET OF	

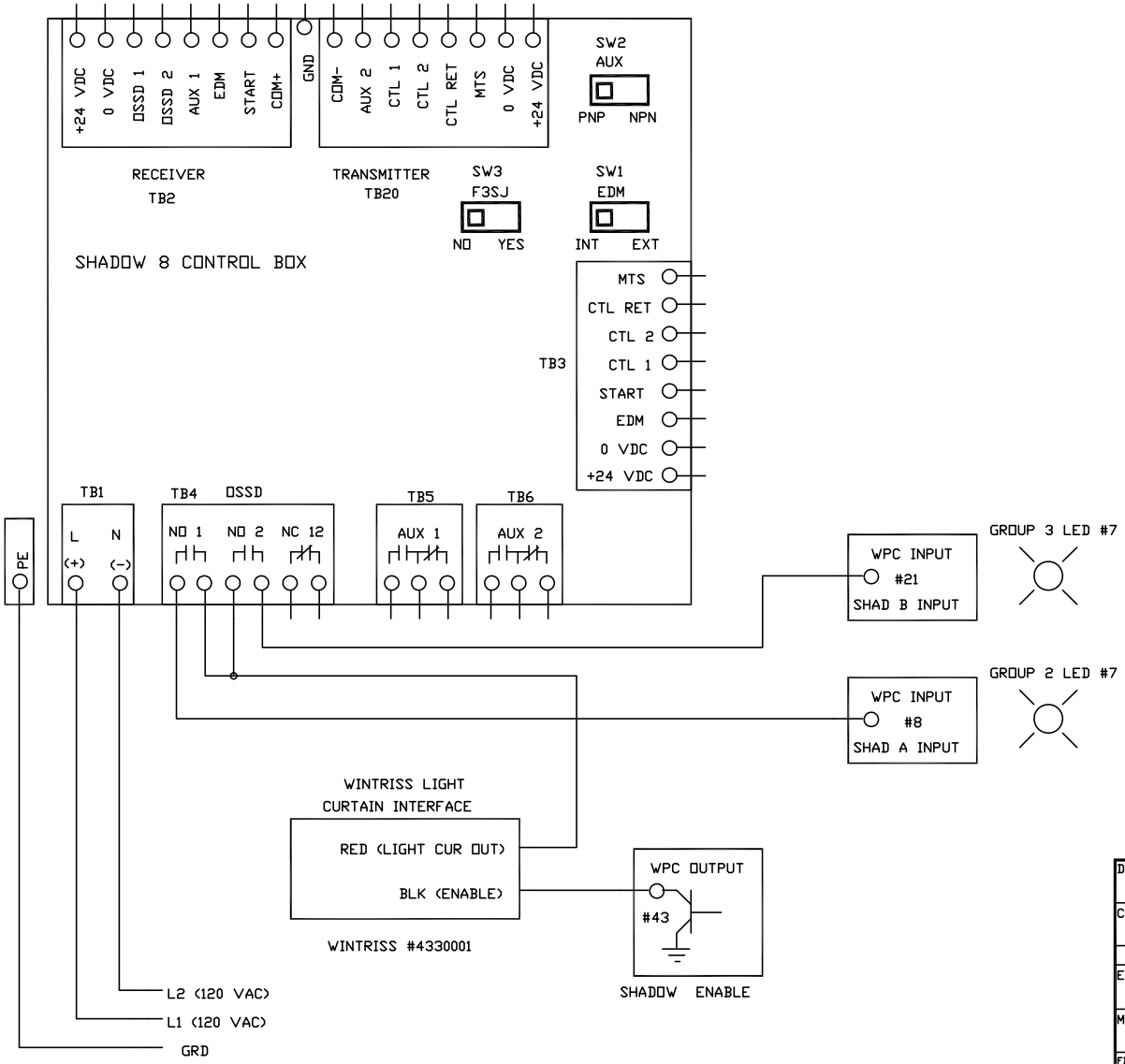

REVISIONS			
REV	DESCRIPTION	DATE	APP'D

SET MODE SWITCHES SWA AND SWB
BEHIND A FLIP DOOR ON BOTTOM OF THE
RECEIVER UNIT AS FOLLOWS:

		SWA	SWB
FOR AUTOMATIC START	SW1 -	OFF	OFF
EDM ENABLED	SW2 -	ON	ON
SCAN CODE A (Set to match transmitter)	SW3 -	OFF	OFF
SCAN CODE B	SW3 -	ON	ON
FLOATING/BLANKING 1 BEAM DISABLED	SW4 -	OFF	OFF
FLOATING/BLANKING 1 BEAM ENABLED	SW4 -	ON	ON
FIXED BLANKING DISABLED	SW5 -	OFF	OFF
FIXED BLANKING ENABLED	SW5 -	ON	ON
SHORT RANGE	SW6 -	OFF	OFF
LONG RANGE	SW6 -	OFF	ON

SET MODE SWITCH BEHIND THE FLIP DOOR
ON BOTTOM OF THE TRANSMITTER UNIT
AS FOLLOWS:

SCAN CODE A (Set to match receiver)	SW1 - OFF
SCAN CODE B	SW1 - ON
MTS DISABLED	SW2 - OFF

DRAWN ADB	DATE 1/15/10	WINTRISS CONTROLS GROUP	
CHK.			
APPROVALS		TITLE WPC 1000 OLD STYLE AND SHADOW 8 WIRING DIAGRAM	
ENG.			
MFG.			
FILENAME		CODE IDENT NO. / SIZE B / DRAWING NUMBER FIGURE 6	REV
REL		SCALE / SHEET OF	

REVISIONS			
REV	DESCRIPTION	DATE	APP'D

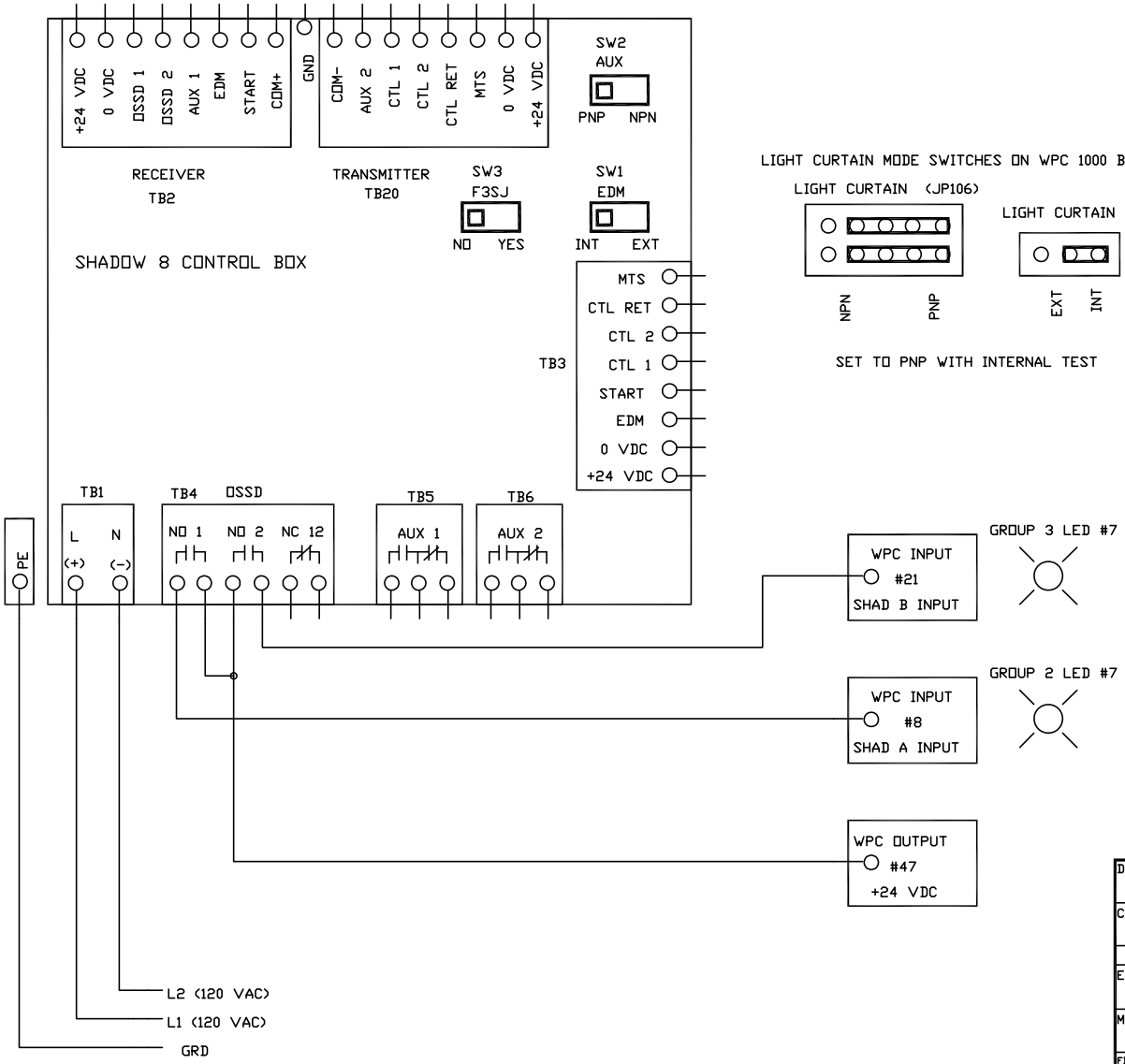

LIGHT CURTAIN MODE SWITCHES ON WPC 1000 BOARD

SET TO PNP WITH INTERNAL TEST

SET MODE SWITCHES SWA AND SWB BEHIND A FLIP DOOR ON BOTTOM OF THE RECEIVER UNIT AS FOLLOWS:

		SWA	SWB
FOR AUTOMATIC START	SW1 -	OFF	OFF
EDM ENABLED	SW2 -	ON	ON
SCAN CODE A (Set to match transmitter)	SW3 -	OFF	OFF
SCAN CODE B	SW3 -	ON	ON
FLOATING/BLANKING 1 BEAM DISABLED	SW4 -	OFF	OFF
FLOATING/BLANKING 1 BEAM ENABLED	SW4 -	ON	ON
FIXED BLANKING DISABLED	SW5 -	OFF	OFF
FIXED BLANKING ENABLED	SW5 -	ON	ON
SHORT RANGE	SW6 -	OFF	OFF
LONG RANGE	SW6 -	OFF	ON

SET MODE SWITCH BEHIND THE FLIP DOOR ON BOTTOM OF THE TRANSMITTER UNIT AS FOLLOWS:

SCAN CODE A (Set to match receiver)	SW1 - OFF
SCAN CODE B	SW1 - ON
MTS DISABLED	SW2 - OFF

DRAWN	ADB	DATE 11/23/09
CHK.		
APPROVALS		
ENG.		
MFG.		
FILENAME		
REL		

WINTRISS CONTROLS GROUP

TITLE

WPC 1000 NEW STYLE AND SHADOW 8 CONTROL BOX WIRING DIAGRAM

CODE IDENT NO.	SIZE	DRAWING NUMBER	REV
	B	FIGURE 7	
SCALE		SHEET OF	

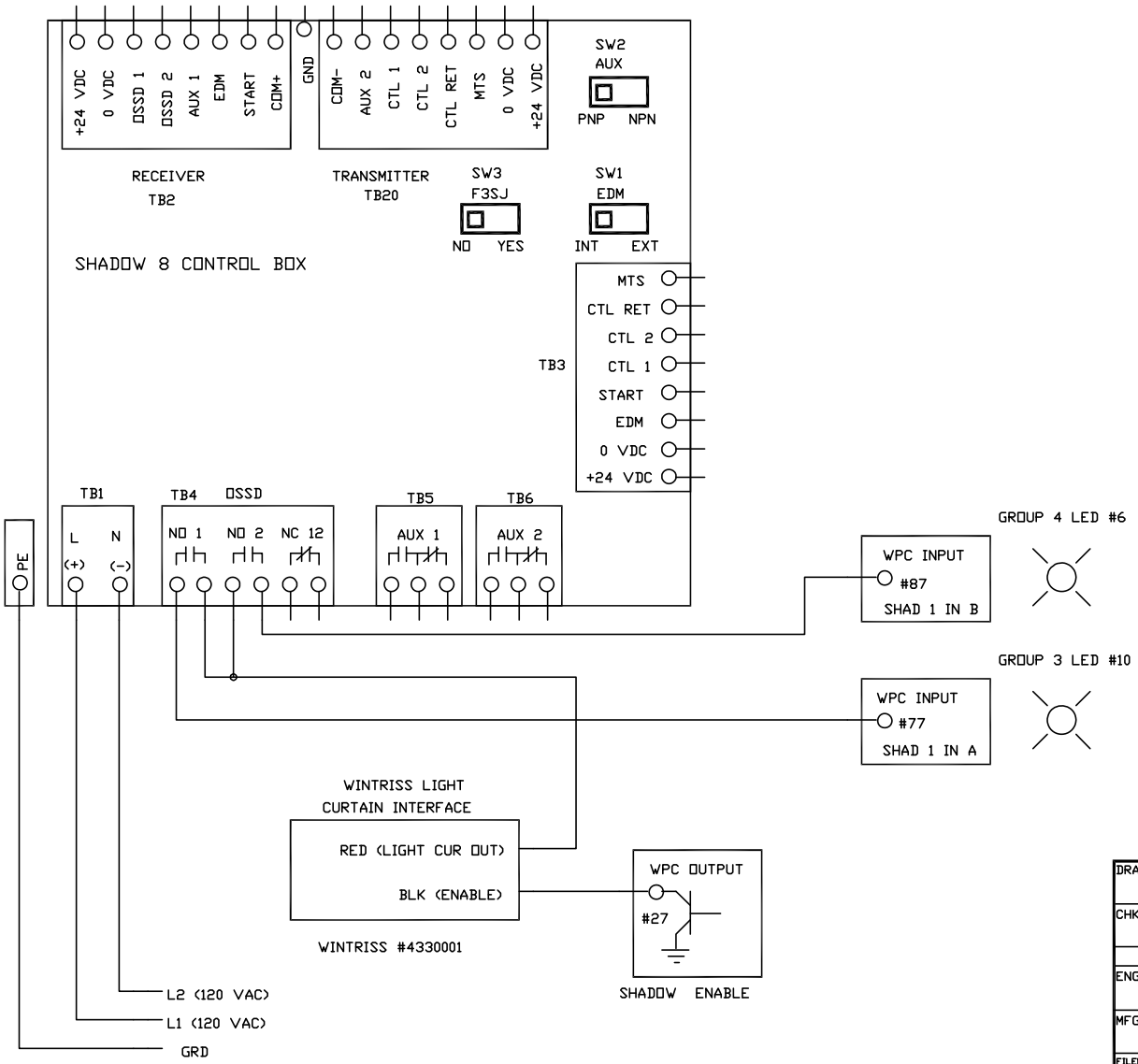

REVISIONS			
REV	DESCRIPTION	DATE	APP'D

SET MODE SWITCHES SWA AND SWB
BEHIND A FLIP DOOR ON BOTTOM OF THE
RECEIVER UNIT AS FOLLOWS:

		SWA	SWB
FOR AUTOMATIC START	SW1 -	OFF	OFF
EDM ENABLED	SW2 -	ON	ON
SCAN CODE A (Set to match transmitter)	SW3 -	OFF	OFF
SCAN CODE B	SW3 -	ON	ON
FLOATING/BLANKING 1 BEAM DISABLED	SW4 -	OFF	OFF
FLOATING/BLANKING 1 BEAM ENABLED	SW4 -	ON	ON
FIXED BLANKING DISABLED	SW5 -	OFF	OFF
FIXED BLANKING ENABLED	SW5 -	ON	ON
SHORT RANGE	SW6 -	OFF	OFF
LONG RANGE	SW6 -	OFF	ON

SET MODE SWITCH BEHIND THE FLIP DOOR
ON BOTTOM OF THE TRANSMITTER UNIT
AS FOLLOWS:

SCAN CODE A (Set to match receiver)	SW1 - OFF
SCAN CODE B	SW1 - ON
MTS DISABLED	SW2 - OFF

DRAWN ADB	DATE 1/15/10	WINTRISS CONTROLS GROUP	
CHK.			
APPROVALS		TITLE WPC II AND SHADOW 8 WIRING DIAGRAM	
ENG.			
MFG.			
FILENAME		CODE IDENT NO. / SIZE B / DRAWING NUMBER FIGURE 8	REV
REL		SCALE / SHEET OF	

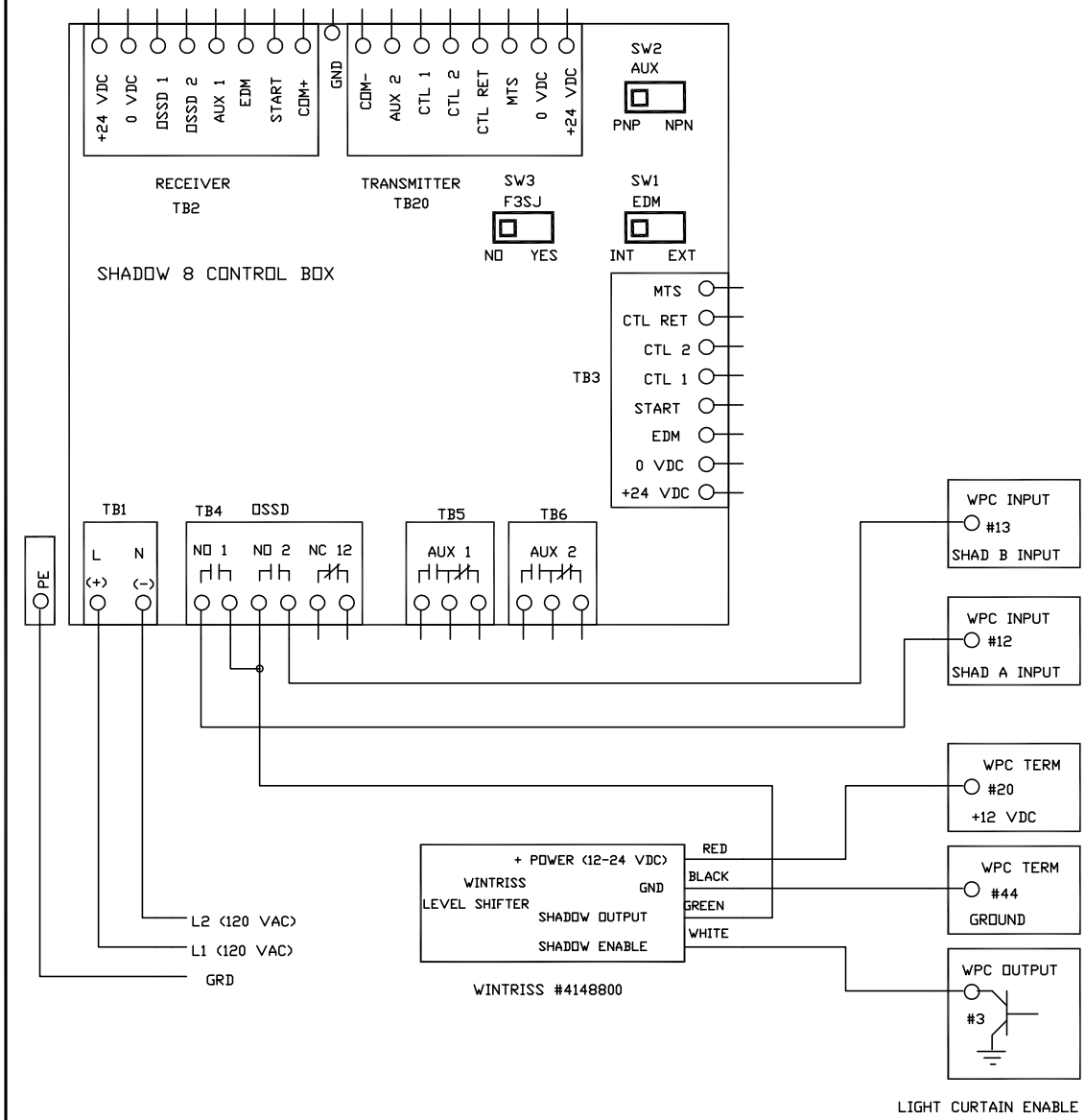

REVISIONS			
REV	DESCRIPTION	DATE	APP'D

SET MODE SWITCHES SWA AND SWB
BEHIND A FLIP DOOR ON BOTTOM OF THE
RECEIVER UNIT AS FOLLOWS:

		SWA	SWB
FOR AUTOMATIC START	SW1 -	OFF	OFF
EDM ENABLED	SW2 -	ON	ON
SCAN CODE A (Set to match transmitter)	SW3 -	OFF	OFF
SCAN CODE B	SW3 -	ON	ON
FLOATING/BLANKING 1 BEAM DISABLED	SW4 -	OFF	OFF
FLOATING/BLANKING 1 BEAM ENABLED	SW4 -	ON	ON
FIXED BLANKING DISABLED	SW5 -	OFF	OFF
FIXED BLANKING ENABLED	SW5 -	ON	ON
SHORT RANGE	SW6 -	OFF	OFF
LONG RANGE	SW6 -	OFF	ON

SET MODE SWITCH BEHIND THE FLIP DOOR
ON BOTTOM OF THE TRANSMITTER UNIT
AS FOLLOWS:

SCAN CODE A (Set to match receiver)	SW1 - OFF
SCAN CODE B	SW1 - ON
MTS DISABLED	SW2 - OFF

DRAWN ADB	DATE 1/15/10	WINTRISS CONTROLS GROUP	
CHK.			
APPROVALS		TITLE WPC I AND SHADOW 8 WIRING DIAGRAM	
ENG.			
MFG.			
FILENAME		CODE IDENT NO. / SIZE B / DRAWING NUMBER FIGURE 9	REV
REL		SCALE / SHEET OF	

REVISIONS			
REV	DESCRIPTION	DATE	APP'D

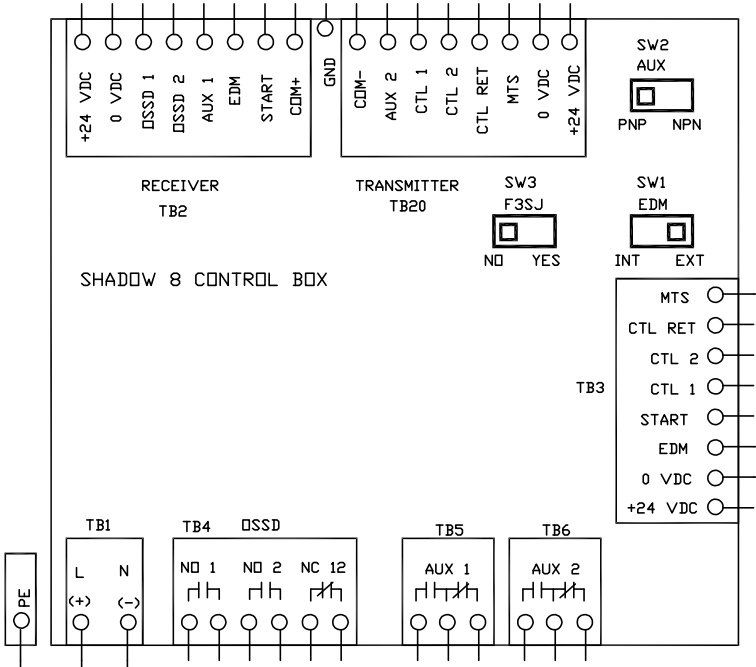

When using a control box then the EDM (External Device Monitoring) in the receiver must be enabled by turning the SW2 switches on inside the receiver head.

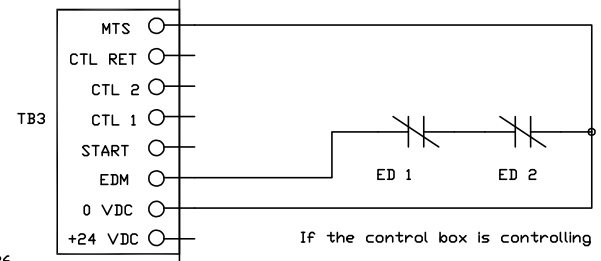

If the control box is controlling externally monitored devices then the EDM (External Device Monitoring) is set to external by setting the SW1 EDM switch to EXT.

SET MODE SWITCHES SWA AND SWB BEHIND A FLIP DOOR ON BOTTOM OF THE RECEIVER UNIT AS FOLLOWS:

		SWA	SWB
FOR AUTOMATIC START	SW1 -	OFF	OFF
START/RESTART INTERLOCK	SW1 -	ON	ON
EDM DISABLED	SW2 -	OFF	OFF
EDM ENABLED	SW2 -	ON	ON
SCAN CODE A	SW3 -	OFF	OFF
SCAN CODE B	SW3 -	ON	ON
FLOATING/BLANKING 1 BEAM DISABLED	SW4 -	OFF	OFF
FLOATING/BLANKING 1 BEAM ENABLED	SW4 -	ON	ON
FIXED BLANKING DISABLED	SW5 -	OFF	OFF
FIXED BLANKING ENABLED	SW5 -	ON	ON
SHORT RANGE	SW6 -	OFF	OFF
LONG RANGE	SW6 -	OFF	ON

SET MODE SWITCH BEHIND THE FLIP DOOR ON BOTTOM OF THE TRANSMITTER UNIT AS FOLLOWS:

SCAN CODE A	SW1 - OFF
SCAN CODE B	SW1 - ON
MTS DISABLED	SW2 - OFF

Note: The NC output is wired in parallel with a NC contact in both OSSD relays. This means that the NC output will be closed if either OSSD relay is de-energized.

THE AUX 1 OUTPUT FOLLOWS THE OSSD'S.

TO MAKE AUX 2 OUTPUT FOLLOW THE OSSD'S YOU MUST PUT A JUMPER FROM TB2 (AUX 1) TO TB20 (AUX 2).

NOTE: SW2 AUX SWITCH MUST BE SET TO PNP.
SW3 F3SJ MUST BE SET TO NO.
SW2 ON RECEIVER MUST BE SET TO EDM ENABLED.

L2
L1
GRD

POWER REQ. 100 - 240 VAC 50-60 HZ
NOT MORE THAN .6/.4 AMPS

OSSD RELAYS:
Two NO and one NC force-guided contacts rated:
AC1: 250 VAC / 6A (resistive load)
DC1: 30 VDC / 6A (resistive load)
AC15: 240 VAC / 2A (inductive load)
DC13: 24 VDC / 1A (inductive load)

AUX OUT RELAYS:
Two NO/NC contacts. 250VAC / 5A, 30VDC / 5A (resistive load); 250VAC / 2A, 30VDC / 3A (inductive load)

DRAWN ADB	DATE 5/23/13	WINTRISS CONTROLS GROUP
CHK.		
APPROVALS		TITLE SHADOW 8 OPTIONS AND WIRING DIAGRAM
ENG.		
MFG.		
FILENAME		CODE IDENT NO. / SIZE B / DRAWING NUMBER FIGURE 10 / REV
REL		SCALE / SHEET OF

NOTE 1: The white and black wires from the transmitter and the pink wire from the reciever are not used. Cut them off close to the encolsure entrance and tyrap them to the other wires.

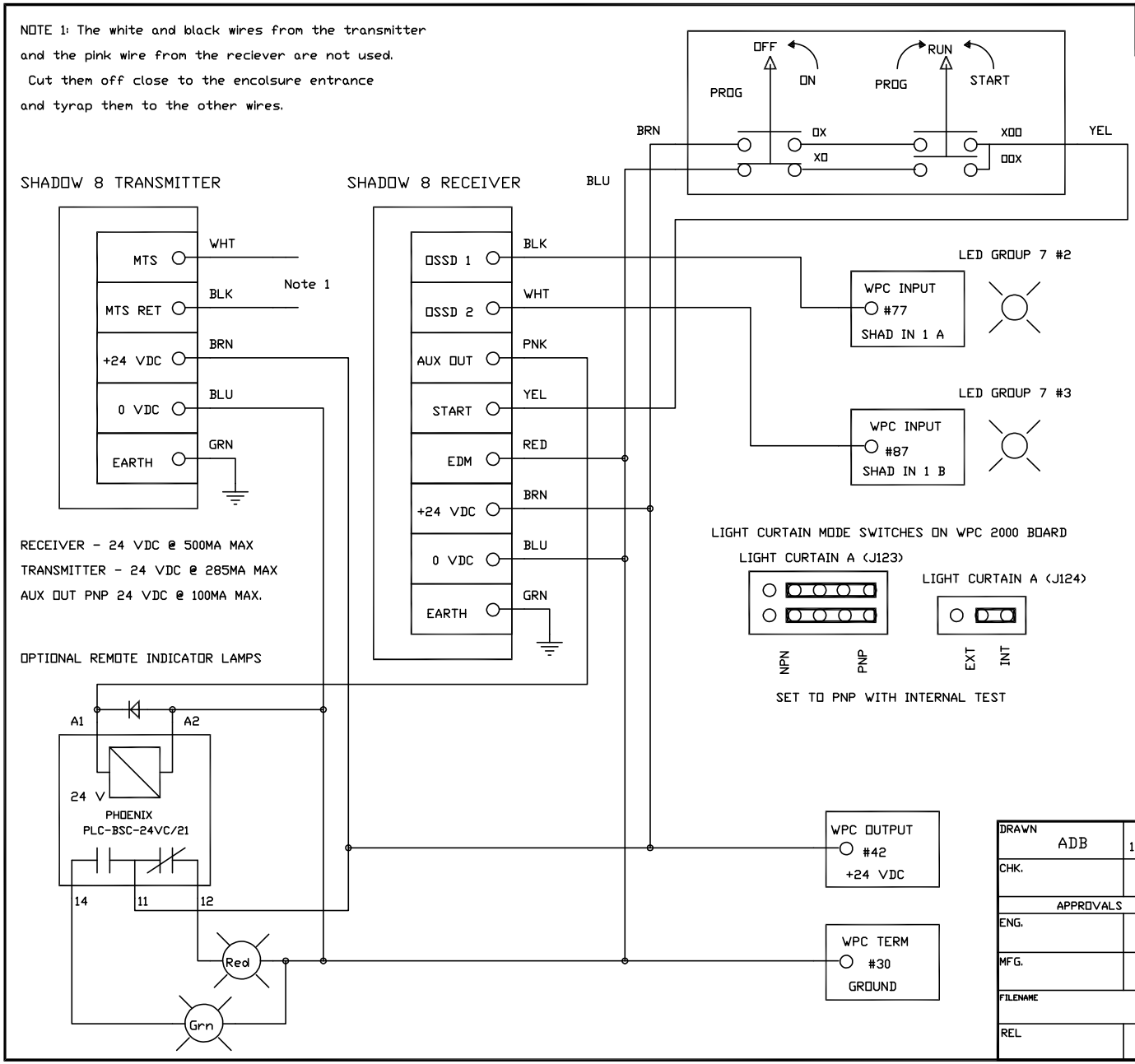

SET MODE SWITCHES SWA AND SWB BEHIND A FLIP DOOR ON BOTTOM OF THE RECEIVER UNIT AS FOLLOWS:

	SWA	SWB
FOR AUTOMATIC START	SW1 - OFF	OFF
EDM DISABLED	SW2 - OFF	OFF
SCAN CODE A	SW3 - OFF	OFF
SCAN CODE B	SW3 - ON	ON
FLOATING/BLANKING 1 BEAM DISABLED	SW4 - OFF	OFF
FLOATING/BLANKING 1 BEAM ENABLED	SW4 - ON	ON
FIXED BLANKING DISABLED	SW5 - OFF	OFF
FIXED BLANKING ENABLED	SW5 - ON	ON
SHORT RANGE	SW6 - OFF	OFF
LONG RANGE	SW6 - OFF	ON

SET MODE SWITCH BEHIND THE FLIP DOOR ON BOTTOM OF THE TRANSMITTER UNIT AS FOLLOWS:

SCAN CODE A	SW1 - OFF
SCAN CODE B	SW1 - ON
MTS DISABLED	SW2 - OFF

REVISIONS

REV	DESCRIPTION	DATE	APP'D

DRAWN	ADB	DATE 1/9/13
CHK.		
APPROVALS		
ENG.		
MFG.		
FILENAME		
REL		

WINTRISS CONTROLS GROUP

TITLE
WPC 2000 AND SHADOW 8
WIRING DIAGRAM

CODE IDENT NO.	SIZE	DRAWING NUMBER	REV
	B	FIGURE 11	

SCALE | SHEET OF

NOTE 1: The white and black wires from the transmitter and the pink wire from the reciever are not used. Cut them off close to the encolsure entrance and tyrap them to the other wires.

REVISIONS			
REV	DESCRIPTION	DATE	APP'D

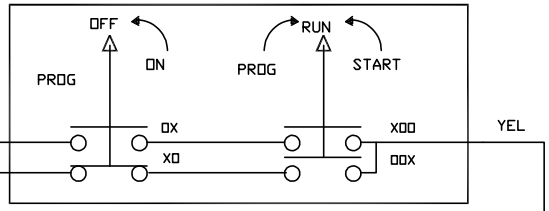

SHADOW 8 TRANSMITTER

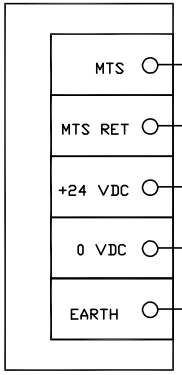

SHADOW 8 RECEIVER

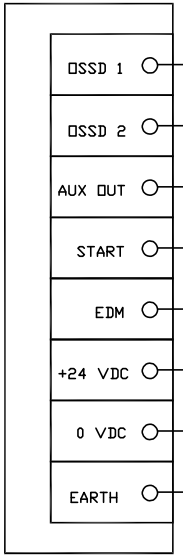

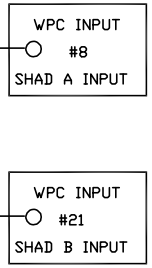

RECEIVER - 24 VDC @ 500MA MAX
TRANSMITTER - 24 VDC @ 285MA MAX
AUX OUT PNP 24 VDC @ 100MA MAX.

OPTIONAL REMOTE INDICATOR LAMPS

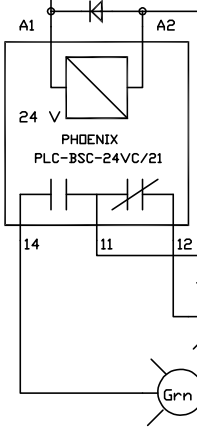

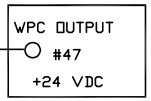

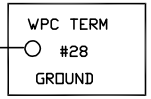

LIGHT CURTAIN MODE SWITCHES ON WPC 1000 BOARD

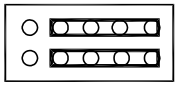

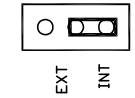

SET TO PNP WITH INTERNAL TEST

SET MODE SWITCHES SWA AND SWB BEHIND A FLIP DOOR ON BOTTOM OF THE RECEIVER UNIT AS FOLLOWS:

	SWA	SWB
FOR AUTOMATIC START	SW1 - OFF	OFF
EDM DISABLED	SW2 - OFF	OFF
SCAN CODE A	SW3 - OFF	OFF
SCAN CODE B	SW3 - ON	ON
FLOATING/BLANKING 1 BEAM DISABLED	SW4 - OFF	OFF
FLOATING/BLANKING 1 BEAM ENABLED	SW4 - ON	ON
FIXED BLANKING DISABLED	SW5 - OFF	OFF
FIXED BLANKING ENABLED	SW5 - ON	ON
SHORT RANGE	SW6 - OFF	OFF
LONG RANGE	SW6 - OFF	ON

SET MODE SWITCH BEHIND THE FLIP DOOR ON BOTTOM OF THE TRANSMITTER UNIT AS FOLLOWS:

SCAN CODE A	SW1 - OFF
SCAN CODE B	SW1 - ON
MTS DISABLED	SW2 - OFF

DRAWN	ADB	DATE 7/16/12
CHK.		
APPROVALS		
ENG.		
MFG.		
FILENAME		
REL		

WINTRISS CONTROLS GROUP

TITLE
WPC 1000 NEW STYLE AND SHADOW 8
WIRING DIAGRAM

CODE IDENT NO.	SIZE	DRAWING NUMBER	REV
	B	FIGURE 12	
SCALE		SHEET OF	

REVISIONS			
REV	DESCRIPTION	DATE	APP'D

NOTE 1: The white and black wires from the transmitter and the pink wire from the reciever are not used. Cut them off close to the encolsure entrance and tyrap them to the other wires.

NOTE: For Shadow 8 configuration switch settings refer to Figure 11.

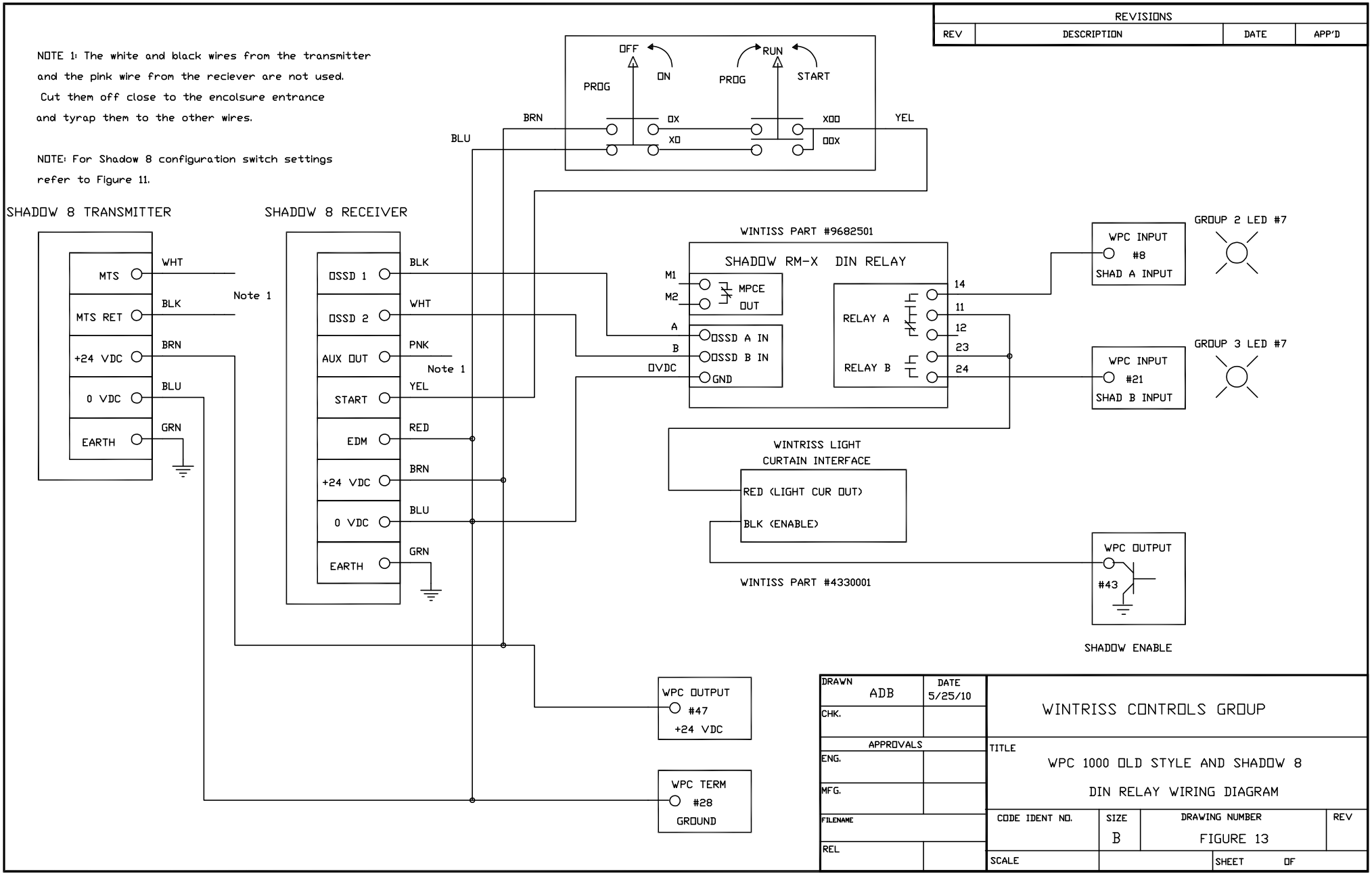

DRAWN	ADB	DATE	5/25/10
CHK.			
APPROVALS			
ENG.			
MFG.			
FILENAME			
REL			

WINTRISS CONTROLS GROUP

TITLE

WPC 1000 OLD STYLE AND SHADOW 8

DIN RELAY WIRING DIAGRAM

CODE IDENT NO.	SIZE	DRAWING NUMBER	REV
	B	FIGURE 13	
SCALE		SHEET OF	

REVISIONS			
REV	DESCRIPTION	DATE	APP'D

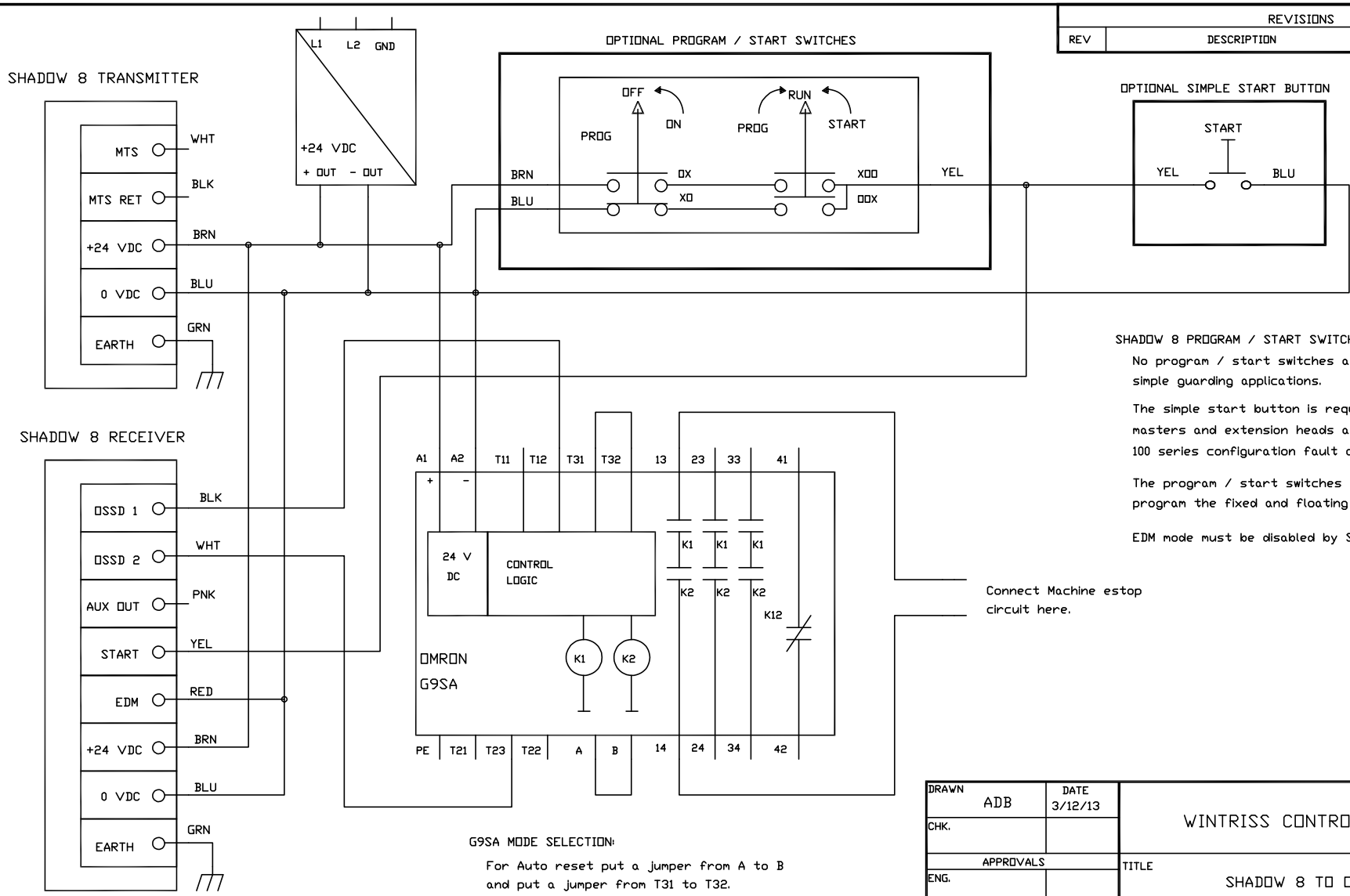

SHADOW 8 PROGRAM / START SWITCHES:

No program / start switches are required for simple guarding applications.

The simple start button is required to reconfigure masters and extension heads and to reset 100 series configuration fault codes.

The program / start switches are required to program the fixed and floating blanking functions.

EDM mode must be disabled by SW 2 off and off.

G9SA MODE SELECTION:

For Auto reset put a jumper from A to B and put a jumper from T31 to T32.

For manual reset leave A and B unconnected and connect a N/O reset button between T31 and T32.

DRAWN ADB	DATE 3/12/13	WINTRISS CONTROLS GROUP
CHK.		
APPROVALS		TITLE SHADOW 8 TO OMRON G9SA WIRING DIAGRAM
ENG.		
MFG.		
FILENAME		CODE IDENT NO. / SIZE B / DRAWING NUMBER FIGURE 14 / REV
REL		SCALE / SHEET OF